SB 8-75-S4

DEPARTMENT OF THE ARMY SUPPLY BULLETIN

Army Medical Department Supply Information

Headquarters, Department of the Army, Washington, DC 20310-2300 20 April 2002

Effective until rescinded or superseded

DISTRIBUTION STATEMENT A: Approval for public release; distribution is unlimited

Printing of this information does not constitute endorsement of the product, manufacturer, or the use of any related item thereof by the U. S. Army.

REPORTING ERRORS AND RECOMMENDING IMPROVEMENTS

You can improve this publication. If you find any mistakes, or you know a way to improve it, please let us know. Mail your letter or DA Form 2028 (Recommended Changes to Publications and Blank Forms) directly to the U. S. Army Medical Materiel Agency, Attn: MCMR-MMI/IMIT, Fort Detrick, MD 21702-5001.

Table of Contents **Page**

Special Notice i
Overview of SB 8-75-S4 ii

Chapter 1 - The AMEDD Logistics Assistance Program 1-1
Chapter 5 - Convention For Safe Containers (CSC) 5-1
Chapter 15 - Unit Markings Placed on DEPMEDS Hospital Equipment 15-1
Chapter 17 - Maintenance and Repair of Tactical Shelter Lift and Support Jack Assemblies 17-1
Chapter 18 - Problems with TEMPER Door Fasteners 18-1
Chapter 19 - Hydrostatic Testing of Compressed Gas Cylinders 19-1
Chapter 20 - M1022A1 Dolly Set Status Update 20-1
Chapter 21 - The Modern Burner Unit 21-1
Chapter 22 - Management of Non-Hospital Sets 22-1

Glossary - G-1
Index - I-1

NOTICE

This Supply Bulletin is devoted entirely to TOE Medical Units and Logistics Personnel

SPECIAL NOTICE

Attention: TOE Medical Units and Logistics Personnel

Retain the 20 April 2001 edition of SB 8-75-S4.

The contents herein for 2002 are considered supplemental to the 2001 edition.

While not every page has been replaced or revised, there are changes that have occurred within the last year that are noteworthy to print. Please use this 2002 edition as a **supplemental resource** - **not a replacement or superseded edition**. The following list shows the status of the contents from 2001 to 2002.

Chapter Number	CHAPTER TITLES	**2002 STATUS**: Replaced (R) New (N) Unchanged (U)
Overview		R
Chapter 1	The AMEDD Logistics Assistance Program	R
Chapter 2	Support Items of Equipment Common Deficiencies	U
Chapter 3	Tactical Shelter Door Locking Device	U
Chapter 4	M-400 Power Distribution Center PEU-155/E	U
Chapter 5	Convention For Safe Containers (CSC)	R
Chapter 6	Tactical Expandable Shelter Tiedown	U
Chapter 7	Non-Medical ASIOE Repair Parts That Are Frequently Used For Repair	U
Chapter 8	Assembly and Packing Instructions for Forward Surgical Team (FST) Operating Table	U
Chapter 9	Tactical Shelter Scissors Jack Location for All Medical Materiel Sets (MMS)	U
Chapter 10	The Acquisition Advice Codes (AAC) W and J	U
Chapter 11	ISO and MILVAN Identification Markings	U
Chapter 12	Operating Table Transport Restraint System, Model 2080M Surgical Tables	U
Chapter 13	Complete Damage Inspection Required When Hospital Tactical Shelters and MILVANs are Moved	U
Chapter 14	Air Conditioner Pulley/Bushing Problems	U
Chapter 15	Unit Markings Placed on DEPMEDS Hospital Equipment	R
Chapter 16	Inventory of DEPMEDS Equipment with TMs	U
Chapter 17	Maintenance and Repair of Tactical Shelter Lift and Support Jack Assemblies	N
Chapter 18	Problems With Temper Door Fasteners	N
Chapter 19	Hydrostatic Testing Of Compressed Gas Cylinders	N
Chapter 20	M10022A1 Dolly Set Status Update	N
Chapter 22	Management Of Non-Hospital Sets	N
Glossary		R
Index		R

OVERVIEW

This Supply Bulletin is produced to assist the Logistics Personnel and the soldier in the field units in enhancing readiness with their equipment and within their unit.

The feedback sheet below requests your proposals for improving the next edition of this Supply Bulletin. It also serves as a vehicle for submitting questions, problems and proposed solutions pertaining to non-medical equipment or ASIOE. The goal is to make future editions of this Supply Bulletin as informative and effective as possible.

CUSTOMER FEEDBACK For SB 8-75-S4 Dated 20 April 2002

Response From: _____
_____
_____
_____

Telephone: _____ FAX: _____
E-mail: _____

FEEDBACK (Please provide any constructive criticism about this edition):

_____
_____
_____
_____

COMMENTS (Please submit any questions, problems or solutions pertaining to non-medical equipment or ASIOE):

_____
_____
_____
_____
_____
_____

Send this sheet with comments to:

United States Army Medical Materiel Agency
Attn: MCMR-MMR-M
Suite 100, Rm 104A
1423 Sultan Dr.
Fort Detrick MD 21702-5001
DSN 343-4465 / Commercial 301-619-4465

CHAPTER 1. THE ARMY MEDICAL DEPARTMENT (AMEDD) LOGISTICS ASSISTANCE PROGRAM

1-1. THE LOGISTICS ASSISTANCE PROGRAM (LAP)

The USAMMA has entered the second year of providing Logistics Assistance Visits (LAVs) to deployable medical units. In this chapter we will provide background information on the LAV program and focus attention on a few of the recurring trends we have identified during previous unit visits.

a. Background Information. AR 700-4, Logistics Assistance, 30 June 1995, para 1-4a, assigns The Surgeon General (TSG) the responsibility to provide logistics assistance to U.S. Army forces for proponent materiel, projects, and systems. AR 40-61, Medical Logistics Policies and Procedures, 25 January 1995, para 2-27a, states that the USAMMA LAV teams will visit field medical units based on MACOM determination of need and availability of the USAMMA resources.

1. The goal of the USAMMA's LAV program is to focus on vital medical logistics issues that affect the readiness of the deployable medical force. The USAMMA's theme is two-fold:

(a) First, to assist Major Commands (MACOMs) and unit commanders in analyzing the true readiness posture of their units; and

(b) Second, to ensure the USAMMA has sufficient medical logistics information to accomplish its missions.

2. Primary objectives for the Army include - but are not limited to:

(a) Establish a baseline of medical materiel readiness levels within various medical organizations,

(b) Identify potential factors that detract from logistics readiness,

(c) Recommend solutions to identified factors, and

(d) Develop a knowledge management network and disseminate useful information to organizations.

3. Primary objectives for the USAMMA include – but are not limited to:

(a) Provide a means to collect, correlate, assess, and disseminate information on those factors that have been found to result in decreased medical logistics readiness.

(b) Provide MACOMs and unit commanders with the technical guidance necessary to resolve medical logistics problems.

(c) Identify and provide reports through channels on all medical logistics functions that have been identified as having an adverse impact on medical logistics readiness including supply, maintenance, transportation, personnel, training, organization, systems, and doctrine.

(d) Provide improvements and sustain the readiness of medical materiel systems and medical logistics support of Active Army, National Guard, and Army Reserve Forces.

(e) Recurring trends. The USAMMA LAV team visited 3 installations and 15 medical units last year. Units visited varied from the large and complex Combat Support Hospitals (CSHs), to the smaller Preventive Medicine Detachments. The organizations visited were able to provide information on recurring trends that affected most of the units, as well as challenges that were unique to the installation visited. The following provides information on trends identified during LAVs conducted in FY01:

(1) Medical Maintenance. Units were challenged to provide the required medical maintenance services on most organic medical equipment. The hospitals had the most difficulty due to the density of assigned equipment. None of the visited hospitals have maintained current calibration on their Rad/Fluoro X-Ray, which is a critical item within a Pacing item Medical Materiel Set (MMS). This points to other challenges:

- 62 of 95 Suction Units at one hospital were missing consumable components;
- 12 of 16 Sterilizers were not Fully Mission Capable (FMC); one was turned in as beyond economical repair;
- Dental X-Ray Film Processor was corroded because chemicals were left in unit.

(2) The USAMMA Sustainment Maintenance Program, described in SB 8-75-S2 provides valuable assistance to units in meeting the maintenance requirements for their equipment.

(3) Container Safety Certifications (CSC). Units are not maintaining CSC on their ISO/MILVAN containers. Only 22 of 124 containers inspected were CSC certified, and the 22 that were certified were due to expire within 3 months. CSC certification is a legal requirement for containers to be moved by road, rail, or air, and unit commanders must insure their containers maintain certification at all times. See chapter 5 for more detailed information on CSC certification.

(4) Hospital units have a difficult time maintaining their assigned Medical Materiel Sets (MMSs) with an acceptable percent of fill on all components. Only 7 of 11 MMSs inventories validated by the USAMMA had a >75% fill, and only 2 of those were greater than 90%. The range was from a high of 96% to a low of 19%, and every MMS reviewed was an Equipment Readiness Code (ERC) P or A assemblage. The good news is that most hospital units had a smaller 84-bed or equivalent element; maintenance and materiel for these was a priority within the unit.

(5) Non-hospital unit units of all types did a very good job maintaining the fill rate with their assigned medical assemblages.

b. The LAV team would like to thank those commanders that allowed us to visit their units and gather readiness trend data.

c. The LAV program will continue in FY02. If you would like us to visit your unit, please use this POC information:

USAMMA
ATTN: MCMR-MML
1423 SULTAN DR
FORT DETRICK MD 21702-5001
Telephone DSN 343-4465 or 301-619-4465

CHAPTER 5. CONVENTION FOR SAFE CONTAINERS (CSC)

5-1. TACTICAL SHELTERS AND MILVANs REQUIRED SAFETY INSPECTION

This chapter provides an overview of the CSC inspection requirements, why the program was developed, and how the program affects U.S. Army Medical organizations that own and use MILVANs and expandable shelters in their operations.

5-2. SAFETY INSPECTION REQUIRMENTS FOR CSC

a. The International CSC was established to ensure safe movement of ISO containers and shelters through international maritime channels. United States Public Law (US PL) 95-208, implemented the CSC requirements for both commercial and the DOD-owned containers.

b. In April 1997, the Deputy Under Secretary of Defense for Logistics took these requirements a step farther by signing DOD 4500.9-R-1, *Management and Control of DOD Intermodal Containers*. This regulation is mandatory for all U.S. Government agencies. Current inspection documentation is required to move a container within the Defense Transportation System (DTS), even if moving the container to an exercise site, i.e., Joint Readiness Training Center (JRTC), National Training Center (NTC), Reserve Training Site Medical (RTS-MED).

c. The readiness state of your unit is partially based on the ability for rapid deployment. This is compromised when medical units do not have the following list of containers certified for shipment through the DTS. An expired certification means a non-deployable container with Line Item Number (LIN):

LIN C13825 - Container Cargo Reusable,
LIN C84541 - Container Assembly Refrigerated,
LIN S01291 - Shelter, 2:1; and
LIN S01359 - Shelter, 3:1.

5-3. COMPLIANCE REQUIREMENTS FOR THE INTERNATIONAL SAFETY STANDARDS TO CERTIFY CONTAINERS

a. In order to comply with this requirement, containers must be inspected IAW the international safety standards:

- five years from the date of manufacture,
- every thirty months thereafter, and
- when repaired after major damage.

b. The DOD 4500.9-R-1 VOL. I and VOL. II dated 11 April 1997, and the MIL-HDBK-138B dated 1 January 2002, are the governing documents. After a successful inspection, the container is certified and so indicated directly on the container itself in a manner that can be readily noted by an inspector. Failure to comply with the above requirements can result in penalties of $5000 each day for each container that remains in service (PL 95-208, Dec 13, 1977).

c. Units may have personnel trained as inspectors or request inspection assistance from your local Directorate of Logistics (DOL) or RTS-MED. The Defense Ammunition Center provides training courses for Intermodal Dry Cargo Container/CSC Re-inspection.

d. Point of contact is:

U.S. Army Defense Ammunition Center
ATTN: SOSAC-ASE
1 C Tree Road
McAlester OK 74501
DSN 956-8967 / Comm 918-420-8967
Email: sosac-ase@dac.army.mil
Web page: http://www.dac.army.mil

5-4. COURSE SCHEDULE FOR FY 2002 INTERMODAL DRY CARGO CONTAINER REINSPECTION

a. Course Admission. Admission to either a resident course or an on-site course (shown in Tables 5-1 and 5-2), is by nomination from the prospective student's command. If the nominating command has access to the Army Training Requirements & Resources System (ATRRS), the submission must be made via ATRRS. Otherwise, DD Form 1556 must be submitted to the address below.

U.S. Army Defense Ammunition Center
ATTN: SOSAC-ASE
1 C Tree Road
McAlester OK 74501
Email: sosac-ase@dac.army.mil
Phone: DSN 956-8967, Comm 918-420-8967
Fax: DSN 956-8944, Comm 918-420-8944

Tables 5-1 through 5-5 list scheduled classes in various locations for CSC Training.

Table 5-1. FY2002 Resident Scheduled Classes at the Defense Ammunition Center, McAlester OK

Course No.	Class No.	Start Date	End Date	Location
AMMO-43	#001	23-Apr-02	25-Apr-02	McAlester, OK
AMMO-43	#002	16-Jul-02	18-Jul-02	McAlester, OK
AMMO-43	#003	17-Sep-02	19-Sep-02	McAlester, OK

Table 5-2. FY2002 On-Site Courses at MOTSU Southport NC Camp Lejeune NC, Philadelphia PA, Gulfport MS, and Korea

Course No.	Class No.	Start Date	End Date	Location
AMMO-43	#101	26-Mar-02	28-Mar-02	MOTSU Southport, NC
AMMO-43	#004	24-Jun-02	26-Jun-02	Camp Lejeune, NC
AMMO-43	#005	23-Jul-02	25-Jul-02	Philadelphia, PA
AMMO-43	#007	6-Aug-02	8-Aug-02	Gulfport, MS
AMMO-43	#006	20-Aug-02	22-Aug-02	Korea

b. Shown in Table 5-3 are on-site classes offered by Memorandum of Agreement (MOA) with Fort Hood. All seats are allocated to and managed by III Corps and Fort Hood's POC. Prior to entering into ATRRS, we recommend you contact the Fort Hood POC for information on availability of seats. Entering names directly into ATRRS at other locations will result in personnel being placed in a WAIT status without any assurance of turnover to RESERVE status.

Table 5-3. FY2002 On-Site Courses at Fort Hood TX, Fort Carson CO

Course No.	Class No.	Start Date	End Date	Location
AMMO-43	#012	16-Apr-02	18-Apr-02	Ft. Hood, TX
AMMO-43	#013	3-Sep-02	5-Sep-02	Ft. Hood, TX
AMMO-43	#109	10-Sep-02	12-Sep-02	Ft. Carson, CO

c. Classes are currently conducted in Buildings 258 at Fort Hood, located on Motor Pool Road off Tank Destroyer Road. Class enrollments are the first day of class at 0845 hours. Class times are from 0900-1800.

Fort Hood's POC:
Education Services Division, Building 211
Ft. Hood TX 76544-5056
Phone DSN 737-1882, Comm 254-287-1882
Fax DSN 738-3005, Comm 254-288-3005

Table 5-4. FY2002 On-Site Courses at Fort Campbell, KY

Course No.	Class No.	Start Date	End Date	Location
AMMO-43	#128	26-Mar-02	28-Mar-02	Ft. Campbell KY
AMMO-43	#129	16-Apr-02	18-Apr-02	Ft. Campbell KY
AMMO-43	#130	21-May-02	23-May-02	Ft. Campbell KY
AMMO-43	#131	4-Jun-02	6-Jun-02	Ft. Campbell KY

d. Fort Campbell's POC:

Installation and Transportation Division
873 Bastogne Ave.
Fort Campbell KY 42223-5129
Phone DSN 635-3424, Comm 270-798-3424

e. Course Admission: Table 5-5 lists classes offered in USAREUR. Directions for enrolling in a USAREUR AOCI course are listed in USAREUR Pam 350-100. Contact the Administration Office at the Combined Arms Training Center via the Internet and use the following Mobile Training Team (MTT) Reminder**:**

Training taught under the MTT concept must be requested through CATC. For more information or to submit a request, email: catcinfo@catc.7atc.army.mil

Table 5-5. FY2002 Scheduled classes at Combined Arms Training Center, Vilseck, Germany

Class No.	Document No	Report Date	Start Date	Close Date	Location
02-02	CCC000002	28-May-02	29-May-02	31-May-02	Vilseck, Germany
03-02	CCC000003	25-Aug-02	26-Aug-02	28-Aug-02	Vilseck, Germany

f. Any questions/comments regarding the courses should be directed to the Course Manager: DSN 314-476-2613, Comm 49-9662-83-2613, Fax DSN 314-476-2669, Comm 49-9662-83-2669.

5-5. TRANSMITTAL REQUEST FOR NEW DEPARTMENT OF DEFENSE FORM DD 2282

(**EXAMPLE**)

TELEFAX / E-MAIL TRANSMITTAL FORM

Date: 1 February 2002 Classification: **None**

Total Number of Pages to Include Cover Sheet: **1**

TO: Container Management Team Leader LOCATION: Alexandria, VA

ATTN: DD Forms 2282 PHONE (703) 428-2467/DSN: 328-2467
FAX (703) 428-3373/DSN: 328-3373

FROM: MCMR-MMR LOCATION: Fort Detrick MD
ATTN: Force Sustainment Division PHONES: DSN 343-4465
COMM 301-619-4465
FAX COMM 301-619-4073

I have completed the AMMO-L-10 Intermodal Dry Cargo Container CSC Re-inspection Course conducted by the U.S. Army Defense Ammunition Center. I am employed by the United States Army Medical Materiel Agency (USAMMA) located at the Force Sustainment Division Fort Detrick, Maryland, and I am requesting the new certification decals DD Form 2282.

I have a total requirement for 100 Medical Expandable Tactical ISO Shelters and associated ISO MILVANs that require the 30 month re-inspection for the USAMMA that are located at the several locations both CONUS and OCONUS. I would appreciate your assistance in providing me with 200 of the current DD Form 2282. 200 of the DD Form 2282 would provide me with an additional amount to complete the re-inspection of any ISO shelter and MILVAN, I observed with overdue inspections during any Temporary Duty (TDY) trips.

Thank you in advance for your assistance in this matter.

U.S. Army Medical Materiel Agency
ATTN: MCMR-MMR
1423 Sultan Drive, Suite 100
Fort Detrick MD 21702-5001
DSN 343-4465 / COMM 301-619-4465 / FAX extension 4073

CHAPTER 15. UNIT MARKINGS PLACED ON DEPMEDS HOSPITAL EQUIPMENT

15-1. DEPMEDS EQUIPMENT IS BEING PAINTED WITH OTHER THAN CHEMICAL AGENT RESISTANT COATING (CARC) PAINT

a. All Deployable Medical Equipment (such as the Tactical ISO Shelters, MILVANs, Generator/Trailers, Dolly Sets and Distribution Illumination Electrical Systems), issued by the USAMMA, are painted with a Chemical Agent Resistance Compound (CARC). This agent protects the equipment and allows for decontamination if the equipment comes in contact with chemical agents.

b. Unit personnel should be advised to use only the correct procedures when placing stencils of unit markings on this equipment.

c. Equipment has been over-sprayed to mark equipment with unit markings, enamel, and lacquer paints are being used over the CARC paint.

d. In AR 750-1, Chapter 4-41, *Painting, CPP, CARC, And Marking Of Army Materiel*, gives instructions that must be complied with when marking equipment that is protected with CARC paint.

15-2. LESSONS LEARNED ABOUT CARC

a. CARC is a coating system for surfaces to make them easily and effectively decontaminated after exposure to liquid chemical agents. There are three types of coatings in the CARC system:

- an epoxy polyamide primer
- an aliphatic polyurethane paint (PUP), and
- epoxy polyamide enamel.

Each of the coatings is supplied as a two-component system. When the two components are combined, a terminal reaction begins that makes an impermeable coating.

b. Before application, the surfaces to be coated with CARC must sometimes be stripped. After stripping, the surface must be cleaned of all oils, grease, and water. When the item is ready for coating, the two components are mixed and allowed to stand for a prescribed period. The mixture must then be applied within a given time period known as its "pot life" to be effective.

c. There are several waste streams associated with the application of CARC. The most common examples of waste are:

- Unserviceable CARC components,
- CARC mixtures with expired pot life, and
- Spent thinners and stripping solvents contaminated with CARC, blasting media with dry CARC residue, and empty containers.

d. Each individual waste stream must be handled and disposed of differently. Guidelines to follow for disposal of CARC are:

(1) UNSERVICEABLE CARC COMPONENTS. Reclamation is the best option, but if it is not possible, then they must be disposed of as hazardous waste with the characteristic of ignitability, and possibly toxicity.

(2) CARC MIXTURES WITH EXPIRED POT-LIFE. These should be allowed to dry. The dried mixture may be disposed of in a sanitary landfill if the paints contain no hazardous

heavy metals. If the mixture contains any heavy metals, then it should be tested using the toxicity characteristic procedure and disposed of accordingly.

(3) SPENT THINNERS AND STRIPPING SOLVENTS CONTAMINATED WITH CARC. Generally, all spent thinners are hazardous for the characteristic of ignitability.

(4) BLASTING MEDIA WITH DRY CARC RESIDUE. If the CARC-contaminated dust is free of heavy metals then the waste may be disposed of in a sanitary landfill. If there are heavy metals present, then the waste must be analyzed using the toxicity characteristic procedure and disposed of accordingly.

(5) EMPTY CONTAINERS. Containers that held any CARC component may be disposed of as ordinary trash as long as they meet the definition of "empty" provided in 40 CFR 261.7(b).

e. The US Army Center for Health Promotion and Preventive Medicine (USACHPPM, Aberdeen Proving Grounds, MD) has a list of non-compliant paints and their alternatives to minimize hazardous waste. For specific information, contact the Action Officer: Hazardous and Medical Waste Program, at DSN 584-3651 or Comm 410-436-3651.

15-3. HEALTH/SAFETY/ENVIRONMENTAL HAZARDS OF CARC

a. Listed below in Fig 15-1 is an excerpt from TM 43-0139, Change 3, 2-10, Section VI, 2-31-a (1) that clarifies the dangers of CARC paint.

TM 43-0139

Section VI. TOPCOAT OR FINISH COAT

2-31. CHEMICAL AGENT RESISTANT COATINGS (CARC)

a. General. Chemical Agents pose a devastating threat to sustained readiness in a combat environment. CARC paints were developed to minimize the impact of this threat. CARC paints are relatively impermeable coatings which do not absorb/desorb chemical agents, and which do not break down when decontaminated.

(1) A common misconception is that CARC paints present greater health/safety/environmental hazards than do other paints. In fact, the health and safety requirements for CARC are the same as those for all paints. And, although CARC paints are currently more expensive and require additional care in application, their durability make overall life cycle costs/efforts less than those of other paint systems.

(2) There are currently three CARC paints:

(a) MIL-C-46168 a two-component aliphatic polyurethane used on exterior surfaces and those interior surfaces frequently exposed (eg, ramps, hatches).

(b) MIL-C-53039 a single component aliphatic polyurethane used wherever MIL-C-46168 may be used.

(c) MIL-C-22750 a two-component epoxy polyamide enamel used only on interior surfaces.

b. Coating, Aliphatic Polyurethane, Chemical Agent Resistant (MIL-C-46168) Two-Component.

(1) Characteristics. This specification covers both camouflage and non-camouflage color chemical agent resistant aliphatic polyurethane coatings (CARC). CARC is designed for easy decontamination after liquid chemical agent exposure. It is available in a standard formula (Type II), and a high-solids VOC compliant formula (TYPE IV). Types II and IV are all lead and chromate free.

Figure 15-1. Excerpt from TM 43-0139

CHAPTER 17. MAINTENANCE AND REPAIR OF THE TACTICAL ISO SHELTER LIFT AND SUPPORT JACK ASSEMBLIES

17-1. INSTALLATION MAINTENANCE, LUBRICATION AND REPAIR

a. Tactical ISO shelters authorized in medical units are issued with two types of support jacks:

Figure 17-1 is the Jack Assembly Hinge, and
Figure 17-2 is the Leveling Support Jack.

The quantity of Jack Assembly Hinged authorized is based on the type of shelter:

1. one-sided shelters are issued two Jack Assembly Hinged, or
2. two-sided shelters are issued four Jack Assembly Hinged.

There are four Leveling Support Jacks issued per container.

b. IAW *TM 10-5411-200-14* and *TM 10-5411-201-14*, units must raise all four Leveling Support Jacks simultaneously during ISO emplacement in order to prevent excessive strain on the jacks or shelter. Excessive strain on the jacks can easily damage or break the jackscrew internal to each jack (Figure 17-3). Replacement of the jackscrew (NSN 5411-01-250-0043) is a unit level repair IAW the maintenance allocation chart in the TM.

c. Units have requested replacement jacks from the USAMMA due to damage caused by improper maintenance of the jacks and improper installation and lifting of the ISO shelter. However, due to the cost, the USAMMA cannot provide replacement jacks. The cost of the Jack Leveling and Support is $3,360 and the cost of the Jack Assembly Hinged is $959.09; yet the cost of a replacement jackscrew is only $610.64.

d. When the tactical ISO shelters are issued to the unit, they may have been stored at the depot for a long period of time and the unit personnel should always refer to the instructions in the *TM 10-5411-201-14*, Paragraph 4-19, to complete the lubrication on the jacks prior to use. Grease (NSN 9150-01-197-7692) used to lubricate the jacks at the depot may have hardened over time and must be replaced; failure to complete this service could result in damage to the jackscrew.

e. The proper method for installing the jack assemblies is found in *TM 10-5411-201-14*, Paragraph 2-12, *Shelter Expansion*, in both tactical ISO technical manuals. The instructions for cleaning, servicing and repairing the jack assemblies are found in Paragraph 4-19 for the Hinged Panel Leveling Jack Assembly Service and Repair. For the Container Lift Jack Assembly Service and Repair, reference Paragraph 4-24. Instructions should always be reviewed prior to installing the jacks onto the ISO shelter.

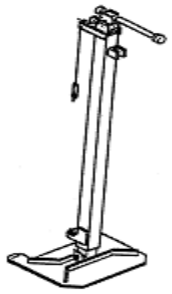

Figure 17-1. JACK ASSEMBLY HINGED
NSN 5411-01-299-4740
COST $959.09

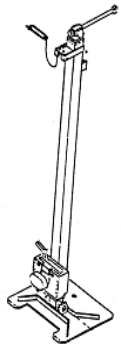

Figure 17-2. JACK LEVELING-SUPPORT
NSN 5120-01-368-8316
COST $3,360.29

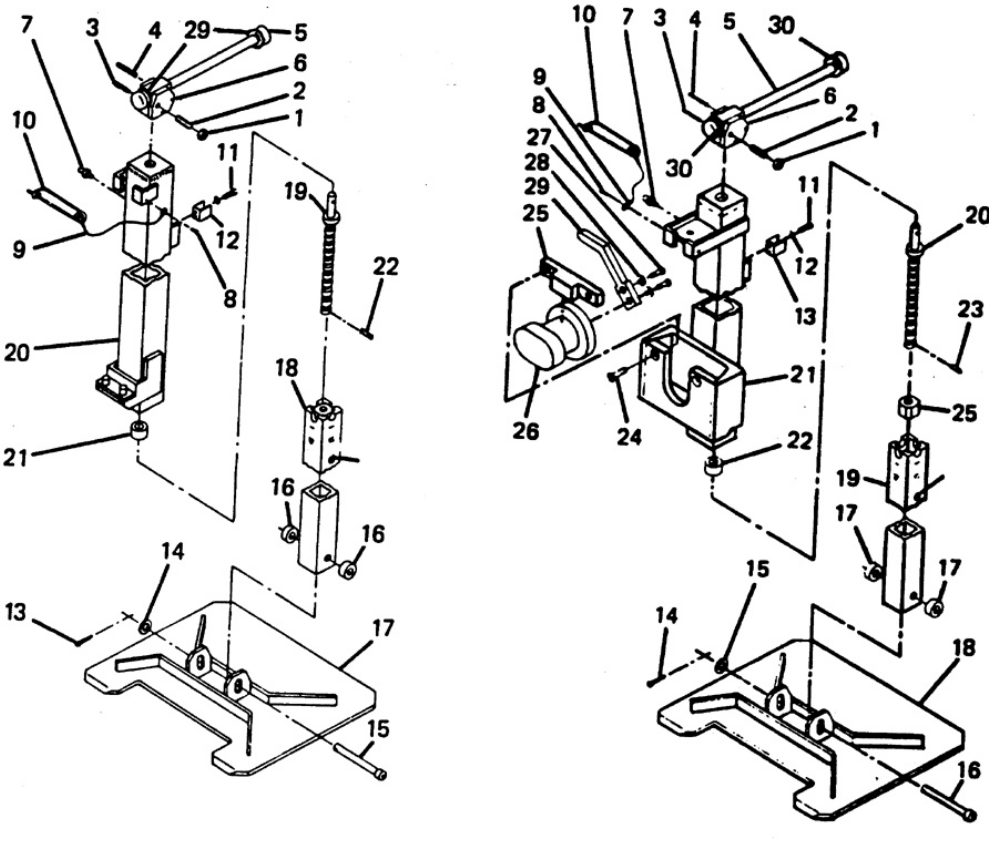

Figure 17-3. Item 19 on the JACK ASSEMBLY HINGED and item 20 on the JACK Leveling Support are the same and can be replaced on both assemblies (Jack Screw NSN 5411-01-250-0043)

CHAPTER 18. PROBLEMS WITH TEMPER DOOR FASTENERS

18-1. PROPER CARE AND MAINTENANCE OF THE SLIDE FASTENERS ON THE MEDICAL TENT EXTENDABLE MODULAR PERSONNEL (TEMPER)

a. The TEMPER Tents (Figure 18-1) are designed to be used in forward areas and require little lubrication. The slide fasteners are the only components of the tent which require lubrication. There is no separate Lubrication Order (LO) for the TEMPER, therefore all lubrication instructions contained in the TM, Chapter 3, Section I are mandatory and are to be adhered to as specified in the TM.

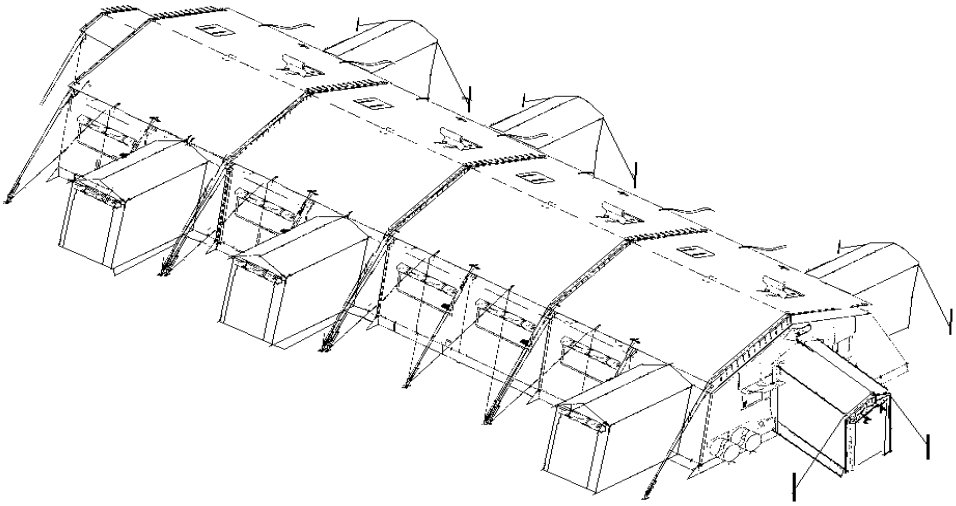

Figure 18-1. Tent Extendable Modular Personnel (TEMPER) 64X20 Surgical Work Area

b. Unit personnel in field medical units have complained that the slide fasteners attached to the TEMPER in their units (known to Soldiers as "zippers"), are hard to operate and become torn loose when they try to open them. The reason the slide fasteners become hard to operate and open is the lack of lubrication.

c. Unit personnel can correct this problem with the slide fasteners by inspecting and making sure the slide fasteners are free from dirt and debris. Lubricate the slide fasteners by applying stick lubricant to metal or plastic slide fasteners when they become difficult to operate. After cleaning and lubricating the slide fasteners, operate the slide fastener to ensure overall lubrication.

d. Lubrication materials are listed in Appendix E of the Technical Manual TM 10-8340-224-13 titled *Operator, Unit, and Direct Support Maintenance* manual for Tent, Extendable, Modular, Personnel (TEMPER).

e. The Lubricant, Interlocking Slide Fastener NSN 9150-00-999-7548 can be ordered at the cost of $10.08 for each box, there are 24 sticks of lubricant in each box.

CHAPTER 19. HYDROSTATIC TESTING OF COMPRESSED GAS CYLINDERS

19-1. TESTING AND PROPER STORAGE OF MEDICAL OXYGEN CYLINDERS

a. The USAMMA occasionally receives inquiries about whether compressed gas cylinders filled with medical grade oxygen (see Figure 19-1), etc., (DOT spec. 3A or 3AA) are required to have a "hydrostatic test" performed at the "due date" (5 year cycle) stamped into the cylinder.

b. There are personnel that interpret this to mean the filled cylinders have to be emptied and tested. The following is the reply from the Compressed Gas Association:

> "Regulation is that a cylinder cannot be refilled and shipped if past retest date. It is okay to continue to use gas from a cylinder that is past due for retest. There is no time limit imposed. However, a cylinder cannot be refilled and shipped if past retest date."

Figure 19-1. Medical Oxygen Cylinders

c. The DOD 4145.19-R-2, *Storage And Handling Of Liquefied And Gaseous Compressed Gasses and Their Full And Empty Cylinders,* Section 3-3 Cylinder Requalification paragraph D states the requalification requirements.

(1) The requirement for a cylinder to be retested after the expiration of a specific service period is further clarified to indicate that after the expiration of the service period the cylinder shall not be recharged until the requalification is preformed.

(2) This is to imply that a visually serviceable full cylinder is considered fully serviceable until the product is exhausted, and then it cannot be refilled until a requalification test and inspection is performed.

d. Therefore, the cylinders on hand that are past "due date" are still good. However, once used they must be retested. They can then be filled for future use and shipment.

(1) Pages 19-2 and 19-3 are excerpts from *AR 700-68*, Encl 2, *Medical Gases and Gas Cylinders Under Management of Defense Personnel Support Center*. The excerpts include Section 1 information on types of medical gases, followed by paragraph 1-2, Procedures (for Storage and Handling), and finally 1-3, Shelf Life (for Medical Gases).

(2) Please refer to the referenced AR for full explanations in all cases. The AR has a website at **http://www.dlaps.hq.dla.mil/dlai/i4145.25.htm**

Excerpt from *AR 700-68*, Encl 2, entitled, *Medical Gases and Gas Cylinders Under Management of Defense Personnel Support Center, Section 1:*

MEDICAL GASES AND GAS CYLINDERS UNDER MANAGEMENT OF DEFENSE PERSONNEL SUPPORT CENTER

SECTION 1

1.1. Gases for medical use are shipped in the same type of steel cylinders as other compressed gases, and use similar valves and valve protection caps. Medical cylinders can be distinguished by the letters AMED@ stamped into the shoulder of the cylinder and/or the word AMEDICAL@ or AUSP@ stenciled on the cylinder after the name of the gas on two diametrically opposite locations parallel to the longitudinal axis of the cylinder. The procedures in enclosure 1 of the document apply to medical gases and constitute the procedures of the proper color coding, storage, handling, inspection, maintenance, and shipment of medical gases. Requirements for reports to DSCR indicated in enclosure 1 of this document will apply also for medical gases and cylinders, with these reports being forwarded to Defense Personnel Support Center (DPSC). Some supplementary instructions for medical gases are desirable, and they are outlined in this enclosure. All cylinders, both empty and filled, managed by DPSC shall meet pressure and all other requirements of the applicable specifications. The medical gases and cylinders centrally managed by DPSC are:

A. Full cylinders:

NSN	GAS	GAL	SIZE
6505-00-130-1940	Nitrous Oxide, USP	2,000	M
6505-00-130-1920	Nitrous Oxide, USP	250	D
6505-00-132-5225	Oxygen, USP	800	M
6505-00-132-5181	Oxygen, USP	95	D
6505-00-132-5199	Oxygen, USP	1,650	H

B. Empty Cylinders

NSN	GAS	GAL	SIZE
8120-00-130-1941	Nitrous Oxide, USP	2.000	M
8120-00-130-1921	Nitrous Oxide, USP	250	D
8120-00-132-5226	Oxygen, USP	800	M
8120-00-132-5182	Oxygen, USP	95	D
8120-00-132-5200	Oxygen, USP	1,650	H

C. Refillable medical gas cylinders are DOT Specification 3AA2015 purchased to Fed Spec RR-C-901, Amend #1 thereto and RR-C-901/3.

D. Nonreuseable (nonrefillable) containers (NRC) are disposable emergency oxygen cylinders managed by DPSC. The full cylinder NSN is 6505-00-965-2439, Oxygen, USP, with Tube and Face Mask. It contains 24 gallon of gaseous oxygen and is a DOT-39 NRC 1000/1250 cylinder.

1-2. PROCEDURES

A. Storage and Handling

1. Medical gases shall be evaluated and considered for their chemical characteristics and stored and handled in a similar manner as the industrial gases outlined in enclosure 1 of this document.

2. The principal types of medical gases are:
   Carbon Dioxide
   Carbon Dioxide and oxygen mixture
   Cyclopropane (no longer in general use)
   Ethylene oxide and nonflammable gas mixtures
   Helium and oxygen mixture
   Methoxyflurane Nitrogen
   Nitrogen and oxygen mixture Nitrous oxide
   Oxygen

3. The hazards of the medical gases are outlined in enclosure 1 of this document.

4. The maintenance of the purity of medical gases is the utmost importance. There are serious hazards involved in transferring compressed gas from one cylinder to another, therefore medical gases shall not be transferred from one cylinder to another.

B. Inspection - Filled Cylinders.

1. Inspection of filled medical gas cylinders consists of a receiving inspection, a storage inspection, and an inspection at time of shipment. Inspection for refilled medical gas cylinders (after refurbishing) will be accomplished at the suppliers facility. Filled Cylinders that are ready for issue and use will bear the tag as required by the DPSC contract to indicate that the cylinders are full. In addition, oxygen-filled cylinders will bear DD Form 1191, Warning Tag for Medical Oxygen Equipment.

2. Inspect all oxygen received at a medical facility for patient use to ensure that it has a letter of certification from the supplier stating that the oxygen meets the requirements of the United States Pharmacopoeia (USP) and Food and Drug Administration (FDA).

1-3. SHELF LIFE. Medical gases managed by DSCP no longer are designated as Type I (non-extendable) shelf-life items with a designated expiration date. This requirement for all DOD medical gases was waived by the FDA in 1987. The full and empty cylinder retesting and reconditioning requirements shall be as outlined in Enclosure 2, Section 3, para 3-3. The cylinder has an indefinite life span and with proper care and hydrostatic testing the cylinder will last 50 to 60 years.

END OF EXCERPTS

e. For more information on this subject go to web site:

http://www.dlaps.hq.dla.mil/dlai/i4145.25.htm

CHAPTER 20. M1022A1 DOLLY SET STATUS UPDATE

20-1. INFORMATION ON THE HISTORY AND CURRENT ISSUES WITH THE M1022A1 DOLLY SET

a. The M1022A1 dolly set is a Tank Automatic Command (TACOM)-managed asset. TACOM is responsible for funding, fielding, training and sustaining the dolly set. TACOM is also responsible for resolving any major defects relating to warranty or faulty manufacturing.

b. The dolly set has had several mechanical problems since fielding. Problems include the hydraulic pump, the cable assembly, and cracks to the frame structure. Cracks to the dolly set's frame structure are the current and most significant cause of concern (Figure 20-1), as well as the reason for the high "dead-line" rate across the military. The deficiency was classified as a Medium Category IIIC risk (minimal risk to humans), by TACOM on 4 Feb 99.

c. The TACOM product managers are addressing the dolly set maintenance problems. The problems with the dolly set were revealed in large part by numerous Army medical units submitting SF Form 369 (Product Quality Deficiency Reports) to TACOM.

d. TACOM has met several times with the manufacturer, Engineered Systems Company (ESCO), a Division of Datron, Inc. On 14 Sep 99, a M1022A1 dolly set program review meeting was held at ESCO with TACOM and Defense Contract Management Command (DCMC) participation. TACOM reported that 100 of the 600 dolly sets fielded have cracks that have "dead-lined" them; 76 of these dollys are in DEPMEDS hospitals.

e. TACOM agreed to do a statistical analysis on the data collected from the field on cracked welds to determine if there are any patterns associated with production dates, location, amount of usage, type of user, etc.

f. In a report from ESCO to DCMC on 21 Sep 99, ESCO noted that on both "test units" tested at Aberdeen Proving Ground, MD, cracks were noted at 1,600 miles and accepted.

g. On 17 Feb 99, ESCO developed and demonstrated the installation of a bolt on reinforcement brackets to fix the defective materiel already delivered to the government. A Finite Element Analysis (FEA) of the brackets shows the brackets are not sufficient to resolve the crack issue.

h. A second meeting was held on 7 Oct 99, at TACOM with the vice president of ESCO, and engineers from both ESCO and the TACOM Research and Development Center (TARDEC). The information discovered during previous analysis proved to be insufficient, requiring an additional FEA to be conducted by TARDEC and ESCO engineers. This FEA continues to be conducted by the engineers from TARDEC and ESCO.

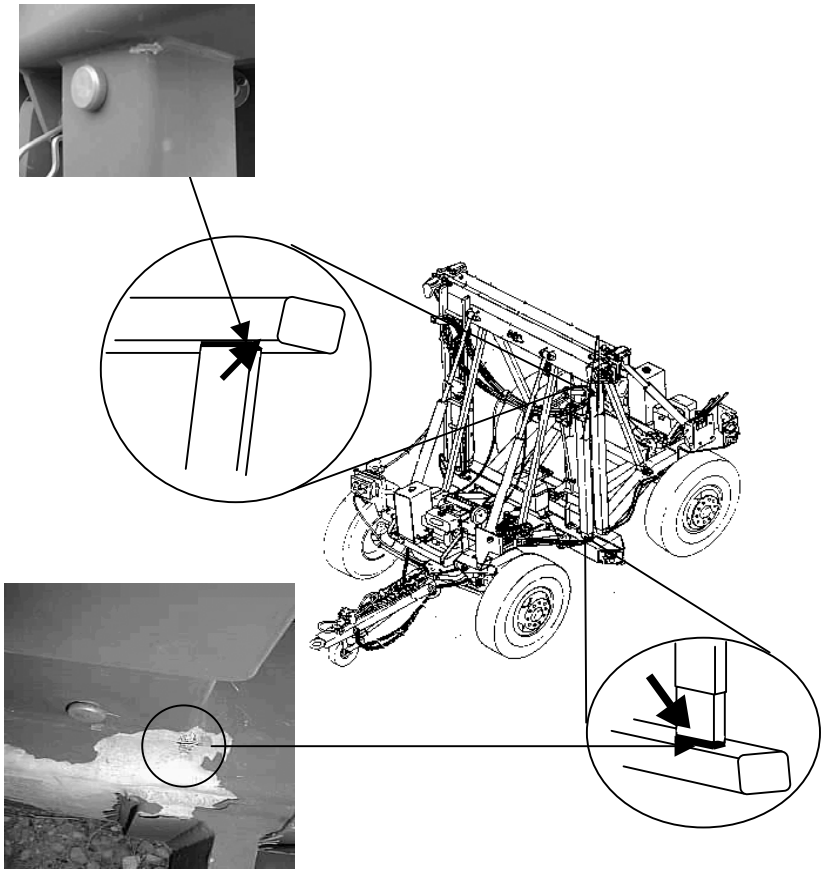

Figure 20-1. Illustration and location of cracks on the M1022 A-1 Dolly Set

20-2. UPDATED STATUS ON THE MWO AND RETROFIT KITS

a. A scope of work for experimental measurement of operational parameters of the dolly set was performed at the Transportation Research Center at East Liberty, Ohio. This action was completed and subsequently in March 2000, a contract was awarded to Keweenaw Research Center (KRC), Hougton, MI, to evaluate the cause and develop a fix to the cracking problem. According to the TACOM Product Manager, on 05 Dec 00 KRC successfully demonstrated a fix for the frame weldment cracks which was accepted by TACOM Engineering, Logistic and Safety Offices. KRC provided a TACOM Drawing Package (TDP) and MWO instructions for installation. The TDP and MWO Instructions are being verified by independent government resources at Tobyhanna Army Depot. The effort is scheduled to complete in March 2002. TACOM plans to procure retrofit kits and apply them in the field soon after, depending on funding availability and prioritization from DCSOPS. There is no projection when funding will be available to accomplish the retrofit project.

b. The original contractor does not accept responsibility for the defect.

c. The M1022A1 Dolly Set is ERC B in MF2K and the MRI Echelon Above Corps (EAC) Hospitals, and is ERC A and B in the MRI Corps Hospital.

CHAPTER 21. THE MODERN BURNER UNIT

21-1. THE MODERN BURNER UNIT (MBU) IS THE REPLACEMENT FOR THE M2 GASOLINE BURNER CURRENTLY USED IN ALL FIELD FEEDING SYSTEMS TO INCLUDE DEPMEDS

a. Compatibility of the MBU (Figure 21-1) with all current field feeding equipment will be achieved by maintaining the same footprint and heat transfer as the M2. The MBU is currently in production and being fielded Army wide by the U.S. Army Soldier and Biological Chemical Command (Table 21-1).

Figure 21-1. Modern Burner Unit

b. The MBU utilizes an automatic, closed circuit fueling system, which avoids spill hazards and eliminates the need to remove the burner for refueling. Employing an electronic ignition, the MBU is ignited in place, saving time by eliminating the pre-heat period required with the M2 and reducing the hazards associated with lighting and carrying lit burners. It also reduces the logistical burden and safety hazards of the M2 by burning less volatile JP-8 fuel instead of gasoline. Electronically controlled combustion maintains the correct fuel/air ratio, thereby decreasing the production of hazardous emissions by.

c. To eliminate the risk of electrical shock during use and maintenance, and allow direct use of vehicle power, less than 90 Watts of 28 Volt DC power is used. Generator compatibility is achieved by providing power converters as required in each kitchen application. The MBU can be easily installed in any of the current Army field feeding equipment systems.

d. The MBU will not be used in the DEPMEDS Sterilizer, Surgical Instrument & Dressing (NSN 6530-00-926-2151) Memorandum from Director, Combat and Doctrine Development, Fort Sam Houston, TX, dated 3 July 2000 subject: Field sterilization, identified that an auxiliary fuel burner is no longer required.

e. The above Memorandum further states: All organizations that are in possession of the sterilizer, Surgical Instrument & Dressing (NSN 6530-00-926-2151) are reminded that the M2a, M2b gasoline burners are no longer a part of the Essential Characteristics (EC) for operation or performance of the sterilizer, and may be turned in to local Defense Reutilization & Marking Service (DRMS) formally know as Defense Reutilization & Marking Office (DRMO) in accordance with local procedures.

21-1. THE FIELDING STATUS OF MODERN BURNER UNIT TO THE TOE HOSPITAL UNITS

Please refer to the website at **http://www.sbccom.army.mil** for more information on the MBU. Table 21-1 shows the fielding status of the modern burner unit currently in production and being fielded Army wide.

Table 21-1. Fielding Status of MBU

MACOM	UIC	UNIT	LOCATION	ARMY/STATE	Fielded
AR	WRV8AA	0405	W HARTFRD	1CT	Yes
AR	WSA0AA	0114	FT SNLLNG	1MN	Yes
AR	WSA6AA	0399	TAUNTON	1MA	Yes
AR	WSB3AA	0323	SOUTHFLD	1MI	Yes
AR	WSBCAA	0075	TUSCALOSA	1AL	Yes
AR	WSC0AA	0369	PUERTO NU	RQ	Yes
AR	WSCCAA	0344	FT TOTTEN	1NY	Yes
AR	WSCEAA	0348	PEDRICKTN	1NJ	Yes
AR	WSCFAA	0349	L ANGELES	5CA	Yes
AR	WSCLAA	0452	MILWAUKEE	1WI	Yes
AR	WTLNAA	0352	OAKLAND	5CA	Yes
AR	WZHRAA	0396	VANCOUVER	5WA	Yes
CO	RTSM02	0000	FT MCCOY	1WI	Yes
APS	WM1BAA	9234	CPCARROLL	KS	Yes
APS	WM1CAA	9235	SAGAMI	JA	Yes
APS	WM1DAA	9236	SAGAMI	JA	Yes
APS	WM1EAA	9237	SAGAMI	JA	Yes
APS	WM1FAA	9238	SAGAMI	JA	Yes
APS	WM1GAA	9239	JUFFAIR	BA	Yes
APS	WM1HAA	9240	JUFFAIR	BA	Yes
APS	WMDEAA	9148	GIBSON	1SC	Yes
APS	WMFPAA	9213	TITUS	1SC	Yes
E5	WBH5AA	0212	MIESAU	GM	Yes
E5	WBJBAA	0067	WURZBURG	GM	Yes
FC	WBH3AA	0010	FT CARSON	5CO	Yes
FC	WBH6AA	0115	FT POLK	5LA	Yes
FC	WBH7AA	0021	FT HOOD	5TX	Yes
FC	WBJ5AA	0249	FT GORDON	1GA	Yes
FC	WBJTAA	0014	FT BENING	1GA	Yes
FC	WBKXAA	0031	FT BLISS	5TX	Yes
FC	WD56AA	0028	FT BRAGG	1NC	Yes
FC	WD5TAA	0086	FT CAMPBL	1KY	Yes
FC	WG4UAA	0047	FT LEWIS	5WA	Yes
P8	WBJJAA	0121	YONGSAN	KS	Yes
AR	WRWAAA	0914	BLACKLICK	1OH	Pending
AR	WSA1AA	0312	GREENSBOR	1NC	Pending
AR	WSA8AA	0018	FT STORY	1VA	Pending

(continued) Table 21-1. Fielding Status of MBU

MACOM	UIC	UNIT	LOCATION	ARMY/STATE	Fielded
AR	WSB4AA	0324	PERRINE	1FL	Pending
AR	WSB5AA	0325	INDEPNDCE	5MO	Pending
AR	WSB6AA	0328	SLT LK CY	5UT	Pending
AR	WSB7AA	0330	MILLINGTO	1TN	Pending
AR	WSB9AA	0337	INDIANPLS	1IN	Pending
AR	WSBAAA	0073	ST PTRSBG	1FL	Pending
AR	WSBLAA	0309	BEDFORD	1MA	Pending
AR	WSBTAA	0021	ST LOUIS	5MO	Pending
AR	WSBWAA	0094	SEAGOVLE	5TX	Pending
AR	WSBYAA	0256	BROOKLYN	1OH	Pending
AR	WSCAAA	0339	OAKDALE	1PA	Pending
AR	WSCMAA	0801	FT SHERDN	1IL	Pending
AR	WSDGAA	0345	JACKSNVLE	1FL	Pending
AR	WTLKAA	0865	UTICA	1NY	Pending
AR	WYFUAA	0921	SACRAMNTO	5CA	Pending
CO	RTSM01	0000	CP PARKS	5CA	Not Listed
CO	RTSM03	0000	FT GORDON	1GA	Not Listed
CO	XX0010	0000	FT S HOUS	5TX	Not Listed

CHAPTER 22. MANAGEMENT OF NON-HOSPITAL SETS

22-1. UPDATE ON CURRENT ISSUES WITH NON-HOSPITAL SET MANAGEMENT

a. Because of limited funding at the unit level and increasing costs of changes to Medical Equipment Sets, Dental Equipment Sets, and Veterinary Equipment Sets (hereafter referred to as MESs), units have encountered difficulties purchasing OMA-funded MES changes IAW AR 40-61, *Medical Logistics Policies and Procedures*, dated 25 January 1995.

b. A proposed DA Policy change is currently being staffed wherein MESs will be assigned unique National Stock Numbers (NSNs) as a result of the cyclic MES review panel convened by the Director of Doctrine and Combat Developments, Army Medical Department Center & School (AMEDDC&S).

c. Should this proposal be approved, units will maintain their non-hospital Unit Assemblages to the 1999 MES Unit Assemblage Listing (UAL), with current NSNs. Units will no longer be required to purchase the Army OMA-funded component to cyclic MES changes. Units will move forward to a new NSN when fielded by the USAMMA. Annual MES maintenance updates will be purchased by units and will continue to be published on a monthly basis by the USAMMA. These updates are primarily cataloging changes and are required to keep the sets viable.

d. This proposal will not preclude units from selectively upgrading OMA-funded set components to the most current configuration if unit funding is available. However, organizations will not be fielded Other Procurement, Army (OPA)-funded support items out of the sustainment cycle to coincide with a unit-funded upgrade.

e. A policy message will be forthcoming, and appropriate changes will be made to AR 40-61 and other pertinent publications, contingent upon approval of the proposal.

22-2. POTENTIAL CHANGE IN U.S. ARMY MEDICAL RESEARCH AND MATERIEL COMMAND (USAMRMC) FIELDING POLICY FOR NON-HOSPITAL SETS

a. The goal of the current USAMRMC fielding policy is to sustain each division-level medical unit on a five-year cycle, through a direct exchange (DX) of all authorized MESs. However, increasing costs of sets and associated OPA-funded items will prevent the USAMMA from attaining this goal within the next several years.

b. As a result, the USAMMA is considering revision of the current policy to enable the sustainment of a greater percentage of the force structure than what is now fiscally possible. The new proposal, currently being staffed in conjunction with the DA policy change outlined above, will enable an upgrade package to be fielded to units. This upgrade package consists of the latest OPA- and OMA-funded changes to authorized Unit Assemblages (UA). Units will retain serviceable items.

GLOSSARY FOR SB 8-75-S4, 2002

Acronym	Explanation
AAC	Acquisition Advice Code
AAC-L	Acquisition Advice Code Local Purchase non-Stocked Items
ACSLOG	Assistant Chief of Staff for Logistics
AMEDD	Army Medical Department
AMEDDC&S	Army Medical Department Center & School
AR	Army Regulation
ARNG	Army National Guard
ASIOE	Associated Support Items of Equipment
ATRRS	Army Training Requirements and Resources System
BII	Basic Issue Items
CAGE	Contractor/Commercial and Government Entity
CARC	Chemical Agent Resistance Compound
CATC	Combined Arms Training Center
CONUS	Continental United States
CSC	Container Safety Certifications, Convention for Safe Containers
CSDP	Command Supply Discipline Program
CSH	Combat Support Hospital
DA	Department of the Army
DCMC	Defense Contract Management Command
DD	Defense Department
DEPMEDS	Deployable Medical Systems
DES	Dental Equipment Sets
DISE	Distribution Illumination Systems Electrical
DOD	Department of Defense
DOL	Directorate of Logistics
DOT	United States Department of Transportation
DPSC	Defense Personnel Support Center
DRMO	Defense Reutilization & Marking Office
DRMS	Defense Reutilization & Marking Service
DCSOPS	Deputy Chief of Staff for Operations and Plans
DTS	Defense Transportation System
DX	Direct Exchange
EAC	Echelon Above Corps
EC	Essential Characteristics
ECU	Environmental Control Unit
ERC	Equipment Readiness Code
ESCO	Engineered Systems Company
FDA	Food and Drug Administration
FEA	Finite Element Analysis
FEDLOG	Federal Logistics Record
FMC	Fully Mission Capable
FST	Forward Surgical Team

(continued) GLOSSARY FOR SB 8-75-S4, 2002

Acronym	Explanation
GPM	Ground Precautionary Message
GS	General Support
HAZ-MAT	Hazardous Material
IAW	In Accordance With
IMM	Integrated Materiel Manager
ISO	International Standardization Organization
IV	Intravenous
JRTC	Joint Readiness Training Center
KRC	Keweenaw Research Center
kw	Kilowatts
LAP	Logistics Assistance Program
LAR	Logistical Assistance Representative
LAV	Logistics Assistance Visit
LIN	Line Item Number
LO	Lubrication Order
MACOM	Major Command
MBU	Modern Burner Unit
MEDLOG	Medical Logistics System
MESs	Medical Equipment Sets
MF2K	Medical Force 2000
MILVAN	Military-Owned De-mountable Container
MMS	Medical Materiel Sets
MOTSU	Military Ocean Terminal Sunny Point
MRI	Medical Reengineering Initiative
MTT	Mobile Training Team
MWO	Modification Work Order
NRC	Nonreuseable, Nonrefillable Containers
NSN	National Stock Number
NTC	National Training Center
OCONUS	Outside Continental United States
OMA	Operation and Maintenance, Army
OPA	Other Procurement, Army
OR	Operating Room
PMCS	Preventive Maintenance Checks and Services
POC	Point of Contact
PUP	Polyurethane Paint
QDR	Quality Deficiency Report

(continued) GLOSSARY FOR SB 8-75-S4, 2002

Acronym	Explanation
RPSTL	Repair Parts and Special Tools List
RTCH	Rough Terrain Cargo Handler
RTS-MED	Reserve Training Site Medical
SMART	Special Management Augmentation Reaction Teams
SOUM	Safety of Use Message
TACOM	Tank Automotive Command
TARDEC	TACOM Research and Development Center
TDP	TACOM Drawing Package
TDY	Temporary Duty
TEMPER	Tent, Extendable, Modular, Personnel
TM	Technical Manual
TMDE	Test, Measurement and Diagnostic Equipment
TT	Total Time
UA	Unit Assemblage
UAL	Unit Assemblage Listing
USACHPPM	U.S. Army Center for Health Promotion and Preventive Medicine
USAH	United States Army Hospital
USAH/U	United States Army Hospital / Unit
USAMMA	United States Army Medical Materiel Agency
USAREUR	United States Army, Europe
USP	United States Pharmacopoeia
VES	Veterinary Equipment Sets
VHS	Vertical Helix Scan
VOC	Volatile Organic Concentrator

INDEX FOR SB 8-75-S4, 2002

SUBJECT	SB 8-75-	PAGE
Acquisition Advice Code (AAC) Of W & J and How They are Used	S4	10-1
Air Conditioner Pulley/Bushing Problems	S4	14-1
Air Conditioner, AE32C39	S4	2-18
Assembly Instructions for OR Table (NSN 6530-01-321-5592)	S4	8-2
CARC, Lessons Learned	S4	15-1
Compliance Requirements for the International Safety Standards to Certify Containers	S4	5-1
Component Descriptions for OR Table	S4	8-10
Components of OR Table (NSN 6530-01-321-5592)	S4	8-1
Container, General Cargo, Military-Owned Demountable Container (MILVAN)	S4	2-6
Containers Require the Proper Markings Prior to Recertification	S4	11-1
Course Schedule for FY 2002 Intermodal Dry Cargo Container Reinspection	S4	5-2
DA Form 2404 (Sample Form)	S4	Appendix B
DD Form 2282 (Sample Form)	S4	Appendix C
DEPMEDS Equipment is Being Painted with Other than CARC Paint	S4	15-1
Description of Table, Operating, Field (NSN 6530-01-321-5592)	S4	8-1
Disassembly and Repacking Instructions for Field Operating Table (NSN 6530-01-321-5592)	S4	8-18
DOD Form DD 2282, Transmittal Request for New	S4	5-4
Dolly Set, M-1022 (NSN 2330-01-167-7262)	S4	2-7
Dolly Set, M-1022A1 (NSN 2330-01-378-9997)	S4	2-7
Fan Pulleys on Air Conditioner Units Present Problems	S4	14-1
Fielding Status of Modern Burner Unit to the TOE Hospital Units	S4	21-2
Forward Surgical Team Operating Table Assembly Instructions	S4	8-1
Frequently Used Repair Parts for the Non-Medical Equipment	S4	7-1
Generator, 100 Kilowatts (kw)	S4	2-17
Health/Safety/Environmental Hazards of CARC	S4	15-2
Improvement of 10/20 Maintenance Standards at Unit Level	S4	2-1
Information on the History and Current Issues with the M1022A1 Dolly Set	S4	20-1
Installation Maintenance, Lubrication and Repair of Tactical ISO Shelter Lift and Support Jack Assemblies	S4	17-1
Inventory of DEPMEDS Equipment is Difficult when Using TMs	S4	16-1
ISO Jack(s) Requirement(s)	S4	9-1
Jack Assembly Hinged (Figs. 17-1 through 17-3)	S4	17-2
Lessons Learned about CARC	S4	15-1
Logistics Assistance Program (LAP), The	S4	1-1
M1022A1 Dolly Set, Cracks and Location of Cracks (Fig. 20-1)	S4	20-2
M1022A1 Dolly Set, Information on the History and Current Issues of	S4	20-1
Modern Burner Unit (Fig. 21-1)	S4	21-1
Modern Burner Unit, Fielding Status to the TOE Hospital Units (Table 21-1)	S4	21-2

(continued) INDEX FOR SB 8-75-S4, 2002

SUBJECT	SB 8-75-	PAGE
Non-Hospital Set Management, Update on Current Issues	S4	22-1
Non-Hospital Sets, Potential Change in USAMRMC Fielding Policy	S4	22-1
Nonmedical Associated Support Items of Equipment (ASIOE) Repair Parts that are Frequently Used to Repair the ASIOE	S4	7-1
Non-Medical Equipment Inspected During Field Visits	S4	2-1
Operating Table Transport System Model 2080M Surgical Tables	S4	12-1
OR Table (NSN 6530-01-321-5592)	S4	8-15
Panel, Power Distribution, M100	S4	2-20
Panel, Power Distribution, M40	S4	2-19
Panel, Power Distribution, M46	S4	2-20
Panel, Power Distribution, M4-600, PEU-155/E	S4	2-19
Parts Listing for Non-Medical Equipment (ASIOE)	S4	7-1
Potential Change in U.S. Army Medical Research and Materiel Command (USAMRMC) Fielding Policy for Non-Hospital Sets	S4	22-1
Proper Care and Maintenance of the Slide Fasteners on the Medical TEMPER	S4	18-1
Proper Placement of Scissors Jack(s) to Support the ISO Shelter	S4	9-1
Proper Tiedown Procedures	S4	6-2
Refrigerated MILVAN	S4	2-22
Safety Inspection Requirements for CSC	S4	5-1
Security and Safety of the Tactical Shelter	S4	3-1
Shelters, Tactical Expandable	S4	2-2
Storage Container (NSN 6530-01-432-3173) for OR Table (NSN 6530-01-432-3173)	S4	8-18
Tactical Shelter Door Locking Device - Introduction	S4	3-1
Tactical Shelter Scissors Jack Location for Added Support	S4	9-1
Tactical Shelter Security and Safety	S4	3-1
Tactical Shelters & MILVANs Require Inspection when Moved	S4	13-1
Tactical Shelters and MILVANs Required Safety Inspection	S4	5-1
Tactical Shelters Damaged from Improper Tie-down	S4	6-1
TEMPER 6x20 Surgical Work Area (Fig. 18-1)	S4	18-1
TEMPER Slide Fasteners, Proper Care of	S4	18-1
Tent, Expandable, Modular, Personnel (TEMPER)	S4	2-21
Testing and Proper Storage of Medical Oxygen Cylinder	S4	19-1
The Modern Burner Unit is the Replacement for the M2 Gasoline Burner Currently Used in All Field Feeding Systems to Include DEPMEDS	S4	21-1
TM43-0139, Excerpt About CARC Hazards (Fig. 15-1)	S4	15-2
Transmittal Request for New DOD Form DD 2282	S4	5-4
Update on Current Issues with Non-Hospital Set Management	S4	22-1
Updated Status on the MWO and Retrofit Kits	S4	20-2
Use of Additional Support to the Tactical ISO Shelter	S4	9-1
Wiring Chaffing Stripe Missing Inside The M-400 Case	S4	4-1

By Order of the Secretary of the Army:
ERIC K. SHINSEKI
General, United States Army
Chief of Staff

Official:
JOEL B. HUDSON
Administrative Assistant to the
Secretary of the Army

Distribution:

To be distributed in accordance with initial distribution number (IDN) 340016, requirements for SB 8-75 Series.