MEDICAL EQUIPMENT SET LABORATORY LIGHTWEIGHT

Support and Consumables Handbook

6545-01-559-5839

UA 263C

LIN M29159

REVISED

November 2011

U.S. Army Medical Materiel Agency

The information contained in this manual was prepared by the

U.S. Army Medical Materiel Agency
Office of PM, Medical Devices
Acquisition Information Division
693 Neiman Street
Fort Detrick, MD 21702-5001

This manual is a living document and may contain inaccuracies due to changes in mission requirements or equipment updates. To report corrections or additions please contact:

Customer Relationship Management
301-619-6901/1288/4301, DSN 343-6901/1288/4301, or at:

USAMMACRM@amedd.army.mil

For additional equipment item information, visit the USAMMA Medical Equipment Literature section on the web at
<http://www.usamma.army.mil/med_equip_lit_cdroms.cfm>

Review the Master Table of Contents for all of the published USAMMA Medical Equipment CDs at
<http://www.usamma.army.mil/assets/docs/Master%20Table%20of%20Contents.pdf>

You can also order a copy of each published CD by completing and submitting the form at
<http://www.usamma.army.mil/CDROM_Requests_form.cfm>

NOTE: CLICK ON TITLE FOR DIRECT LINK

TABLE OF CONTENTS

SECTION	DEVICE	NSN	PAGE
1	ANALYZER BLOOD GAS	(J) 6630-01-526-7377	1
2	BALANCE LABORATORY HARVARD DOUBLE BEAM	(Z) 6670-00-401-7195	9
3	CENTRIFUGE LABORATORY 3400 RPM	(J) 6640-01-416-7345	13
4	CHAIR LOUNGE BLOOD DONOR ADJUSTABLE	(L) 6530-01-508-6662	17
5	CONTAINER TRANSPORT THERMAL WOODLAND	(L) 6530-01-505-5301	23
6	INCUBATOR, DRY HEAT	(J) 6640-01-564-7932	27
7	MICROSCOPE OPTICAL LABORATORY	(J) 6650-01-519-8473	33
8	REFRACTOMETER HAND	(L) 6650-00-933-3218	39
9	REFRIGERATOR SOLID STATE BIO	(L) 4110-01-506-0895	43
10	REFRIGERATOR UNDERCOUNTER	(L) 4110-01-504-1157	51
11	REFRIGERATOR-FREEZER	(L) 4110-01-425-8009	55
12	VIEWER AGGLUTINATION	(Y) 6640-01-500-8779	59

Please provide all comments at the website link listed below.

https://ice.disa.mil/index.cfm?fa=card&site_id=750&service_provider_id=102377

Select: EQUIPMENT PUBLICATIONS BUTTON AT TOP OF FORM

ANALYZER BLOOD GAS

TOC

MANUFACTURER: ABBOTT LABORATORIES INC.
Manufacturer Model# 04J48-20
Manufacturer's PHONE: (609) 454-9000 FAX: (609) 443-9310
Manufacturer's Website: <http://www.abbott.com>

Item Web Link:
<http://www.abbottpointofcare.com/testing-products.aspx>

AAC 'J' ITEM NSN 6630-01-526-7377

UA's: 009A, 263C, 267B, 512A, 905C, 912B, N503, N703

USAMMA POC: Customer Relations Management 301-619-4301/6901 - DSN 343-4301/6901
UNIT PRICE: $11,589.07

System Description: Point-of-use blood analyzer for the measurement of blood gases and electrolytes. Utilizes 2 to 3 drops of fresh whole blood in a disposable test cartridge that is inserted into the handheld analyzer. The cartridge self-calibrates miniaturized sensors upon insertion into the analyzer. Results are displayed in less than 2 minutes. Records and automatically stored (up to 50) for printing and/or transmission. A daily quality control of less than 60 seconds is required. Upon completion, all blood and calibrant fluid is contained within the cartridge for safe bio-hazard disposal.

Features:
- Point-of-use capability.
- Weight reduction (GEM STAT – 27 lbs, i-STAT – 18 oz)
- Battery backup (12 VDC)
- Extensive array of cartridge-based panels
- Small sample size (GEM STAT – 0.5 ml, I-STAT – 65 mL)

Tests Performed:
- Glu - Glucose
- pH
- pCO^2
- Bicarbonate (calculated)
- Total carbon dioxide (calculated)
- Base excess
- Sodium
- Potassium
- Chloride
- Urea nitrogen
- Hematocrit
- Hemoglobin (calculated)
- Anion (calculated)
- Creatinine
- cTnl
- PT/INR

NOTE: NEW SOFTWARE UPDATES ARE REQUIRED PRIOR TO EACH DEPLOYMENT

ANALYZER BLOOD GAS WITH HARD CASE I-STAT
PART # 04J48-20
NSN 6630015267377

ANALYZER BLOOD GAS
PART # 6F16-10
NSN 6630015205212

DOWNLOADER-RECHARGER SERIAL WITH I-STAT ANALYZER & BATTERY
PART # 06F23-45
NSN 6630015263620

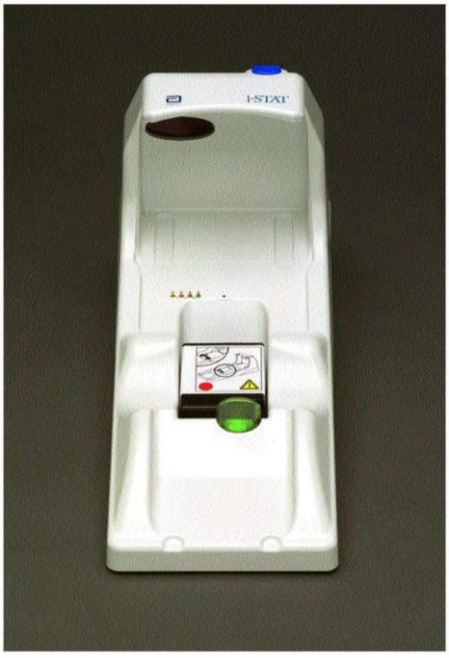

DOWNLOADER-RECHARGER SERIAL WITH I-STAT ANALYZER & BATTERY
PART # 06F23-45
NSN 6630015263620

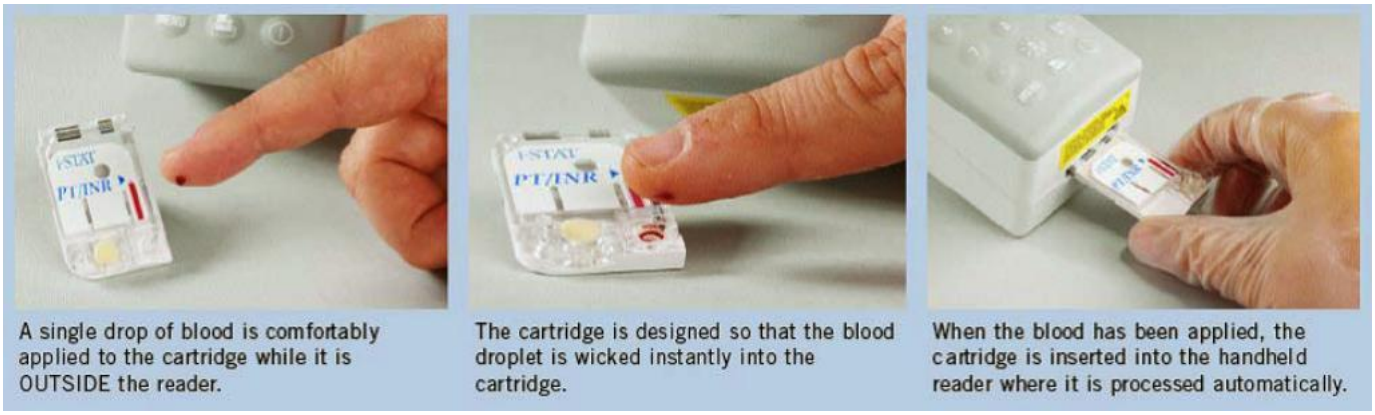

A single drop of blood is comfortably applied to the cartridge while it is OUTSIDE the reader.

The cartridge is designed so that the blood droplet is wicked instantly into the cartridge.

When the blood has been applied, the cartridge is inserted into the handheld reader where it is processed automatically.

I-STAT CARTRIDGE SAMPLE APPLICATION AND TEST INSERTION

ANALYZER BLOOD GAS
PHYSICAL & ENVIRONMENTAL SPECIFICATIONS

Item Dimensions	**Height (Inches)**	**8.26**
	Width (Inches)	**2.52**
	Length (Inches)	**2.05**
	Cube (Cubic Feet)	**0.0247**
	Weight	**1.146 lbs.**
Ship Dimensions	**Height (Inches)**	**9**
	Width (Inches)	**16**
	Length (Inches)	**22**
	Cube (Cubic Feet)	**1.8333**
	Weight	
Storage Temp		
Operating Temp		**64° to 86°F**
Storage Humidity		**0 to 90% Non-Condensing**
Operating Humidity		
Amps		**0.5 - 0.9**
Watts		**90 - 120**
Power Requirements	**100 – 240VAC 47/63 Hz**	
Notes		

ANALYZER BLOOD GAS
ACCESSORIES & CONSUMABLES - STARTUP

NSN	Notes	Nomenclature	MFR PN Abbott Laboratories Inc.	DIST PN	QTY	UI	Unit Price	Total Price	Shelf Life Mon.
6630015267377		Analyzer Blood Gas	04J48-20		1	EA	$11,589.07	$11,589.07	N/A
	See Additional Note	Adapter, Keyboard, AT	012127-01		1	EA	Incl w/NSN 7377	Incl w/NSN 7377	N/A
	See Additional Note	Adapter, Keyboard, IBM	012128-01		1	EA	Incl w/NSN 7377	Incl w/NSN 7377	N/A
	See Additional Note	Adapter, PC/IR-Light	013567-01 02		1	EA	Incl w/NSN 7377	Incl w/NSN 7377	N/A
	See Resupply for NSN	Paper Recording Clinical Analyzer Use W/Hewlett Packard Ptbl 6s	06F17-11		1	3/PG	Incl w/NSN 7377	Incl w/NSN 7377	N/A
	See Resupply for NSN	Battery Analyzer Rechargeable	06F23-55		2	EA	Incl w/NSN 7377	Incl w/NSN 7377	N/A
6135014217168		Battery, Lithium 9V	06F21-26		1	EA	Incl w/NSN 7377	Incl w/NSN 7377	N/A
6630014222097		Electronic Simulator Quality Control Test Clinical Analyzer	06F11-01		1	EA	Incl w/NSN 7377	Incl w/NSN 7377	60
6630015205212		Analyzer Blood Gas	06F16-10		1	EA	Incl w/NSN 7377	Incl w/NSN 7377	N/A
6630015243128		Cartridge Ceramic Ist	04J51-01		1	EA	Incl w/NSN 7377	Incl w/NSN 7377	N/A
6630015263620		Downloader/Recharger Serial	06F23-45		1	EA	Incl w/NSN 7377	Incl w/NSN 7377	N/A
6630015264091		Printer Analyzer Portable	06F23-91		1	EA	Incl w/NSN 7377	Incl w/NSN 7377	N/A
6630015264102		Carry Case Analyzer	06F16-79		1	EA	Incl w/NSN 7377	Incl w/NSN 7377	N/A
6630015377571		Power Cord	06F16-39		1	EA	Incl w/NSN 7377	Incl w/NSN 7377	N/A
7610015074390		Manual Technical Operation Manual	06F16-30		1	EA	Incl w/NSN 7377	Incl w/NSN 7377	N/A

ANALYZER BLOOD GAS
ITEMS FOUND IN THE UNIT ASSEMBLAGE SUPPORTING THIS ITEM

NSN	Notes	Nomenclature	MFR PN Abbott Laboratories Inc.	DIST PN	QTY	UI	Unit Price	Total Price	Shelf Life Mon.
6550014318279	In The UA	Control Bld Chem U/W G E3+ G3+ Ec4+ 6+ Eg6+ Ec6+ & Ec8 1.7ml 10s	06F12-01		1	10/PG	$27.54	$27.54	6
6550014323696	In The UA	Control Bld Chem Use W/G E3+ G3+ Ec4+ 6+ Eg6+ Ec6+ Ec8 1.7ml 10s	06F14-01		1	10/PG	$11.85	$11.85	6
6550015064928	In The UA	Test Cartridge Creatinine 25s	06F10-01		1	25/PG	$75.00	$75.00	N/A
6550015215326	In The UA	Reference Std Kit Blood Chemistry E.I. 6630-01-520-5212 2s	06F15-02		1	2/PG	$145.00	$145.00	9
6550015215358	In The UA	Control Blood Chemistry Coagulation Control Reagent Level2 1ml6s	04J50-22		1	6/PG	$196.00	$196.00	9

ITEMS FOUND IN THE UNIT ASSEMBLAGE SUPPORTING THIS ITEM

NSN	Notes	Nomenclature	MFR PN Abbott Laboratories Inc.	DIST PN	QTY	UI	Unit Price	Total Price	Shelf Life Mon.
6550015215361	In The UA	Control Bld Chem Coagulation Reag 1ml10	04J50-21		1	6/PG	$190.00	$190.00	9
6550015215426	In The UA	Control Cardiac Reagent Level 1 1ml 6s	06F12-02		1	6/PG	$150.00	$150.00	9
6550015215427	In The UA	Cartridge Coagulation Test Protime Use W/6630-01-520-5212 24s	04J50-01		1	24/PG	$132.00	$132.00	4
6550015215436	In The UA	Cartridge Cardiac Test Myocardial Infarct 25s	06F15-03		1	25/PG	$235.00	$235.00	4
6550015344571	In The UA	Control Blood Chemistry 3 Levels F/Monitoring Cartridge 10s	06F12-04		1	10/PG	$49.38	$49.38	18
6550015344595	In The UA	Control Blood Chemistry 3 Levels F/Monitoring Cartridge 10s	06F12-06		1	10/PG	$49.38	$49.38	18

ANALYZER BLOOD GAS
ACCESSORIES & CONSUMABLES - RESUPPLY

NSN	Notes	Nomenclature	MFR PN Abbott Laboratories Inc.	DIST PN	QTY	UI	Unit Price	Total Price	Shelf Life Mon.
6135014217168		Battery, Lithium 9V	06F21-26		1	6/PG	$35.00	$35.00	N/A
6550014318279	Refrigeration Required	Control Bld Chem U/W G E3+ G3+ Ec4+ 6+ Eg6+ Ec6+ & Ec8 1.7ml 10s	06F12-01		1	10/PG	$27.54	$27.54	6
6550014323696	Refrigeration Required	Control Bld Chem Use W/G E3+ G3+ Ec4+ 6+ Eg6+ Ec6+ Ec8 1.7ml 10s	06F14-01		1	10/PG	$11.85	$11.85	6
6550014338679		Test Pack SOD K CHL Partial	06F04-01		1	25/PG	$345.83	$345.83	2
6550015064928		Test Cartridge Creatinine 25s	06F10-01		1	25/PG	$75.00	$75.00	N/A
6550015215326	Refrigeration Required	Reference Std Kit Blood Chemistry E.I. 6630-01-520-5212 2s	06F15-02		1	2/PG	$145.00	$145.00	9
6550015215358	Refrigeration Required	Control Blood Chemistry Coagulation Control Reagent Level2 1ml6s	04J50-22		1	6/PG	$196.00	$196.00	9
6550015215361	Refrigeration Required Refrigeration Required	Control Bld Chem Coagulation Reag 1ml10	04J50-21		1	6/PG	$190.00	$190.00	9
6550015215426	Refrigeration Required	Control Cardiac Reagent Level 1 1ml 6s	06F12-02		1	6/PG	$150.00	$150.00	9
6550015215427	Refrigeration Required	Cartridge Coagulation Test Protime Use W/6630-01-520-5212 24s	04J50-01		1	24/PG	$132.00	$132.00	4
6550015215436	Refrigeration Required Refrigeration Required	Cartridge Cardiac Test Myocardial Infarct 25s	06F15-03		1	25/PG	$235.00	$235.00	4

ACCESSORIES & CONSUMABLES - RESUPPLY

NSN	Notes	Nomenclature	MFR PN Abbott Laboratories Inc.	DIST PN	QTY	UI	Unit Price	Total Price	Shelf Life Mon.
6550015344571	Refrigeration Required	Control Blood Chemistry 3 Levels F/Monitoring Cartridge 10s	06F12-04		1	10/PG	$49.38	$49.38	18
6550015344595	Refrigeration Required	Control Blood Chemistry 3 Levels F/Monitoring Cartridge 10s	06F12-06		1	10/PG	$49.38	$49.38	18
6630014222097		Electronic Simulator Quality Control Test Clinical Analyzer	06F11-01		1	EA	$453.38	$453.38	60
6630015205212		Analyzer Blood Gas	06F16-10		1	EA	$5,037.50	$5,037.50	N/A
6630015243128		Cartridge Ceramic Ist	04J51-01		1	EA	$0.00	$0.00	N/A
6630015263620		Downloader/Recharger Serial	06F23-45		1	EA	$547.59	$547.59	N/A
6630015264091		Printer Analyzer Portable	06F23-91		1	EA	$292.18	$292.18	N/A
6630015264098		Battery Analyzer Rechargeable	06F23-55		1	EA	$110.83	$110.83	N/A
6630015264102		Carry Case Analyzer	06F16-79		1	EA	$1,715.48	$1,715.48	N/A
6630015377571		Power Cord	06F16-39		1	EA	$11.49	$11.49	N/A
6640014195698		Paper Recording Clinical Analyzer Use W/Hewlett Packard Ptbl 6s	06F17-11		1	6/PG	$14.70	$14.70	N/A
7610015074390		Manual Technical Operation Manual	06F16-30		1	EA	$23.93	$23.93	N/A

ANALYZER BLOOD GAS
ADDITIONAL NOTE:

Adapters CANNOT be ordered separately but are supplied with i-STAT.

BALANCE LABORATORY HARVARD DOUBLE BEAM

TOC

MANUFACTURER: OHAUS CORP
Manufacturer Model# 1550-SD
Manufacturer's PHONE: (973) 377-9000 FAX: (973) 944-7030
Manufacturer's Website: <http://www.ohaus.com>

Item Web Link:
<http://us.ohaus.com/us/en/home/products/product-families/HVD-US.aspx>

AAC 'Z' ITEM NSN 6670-00-401-7195

UA's: 263C, N436, N503, N504, N703, N704

USAMMA POC: Customer Relations Management 301-619-4301/6901 - DSN 343-4301/6901
UNIT PRICE: $216.00

System Description: The 1550-SD offers a two-pan design based on the classic Roberval balance principle. Ohaus Harvard Trip balances feature the additional advantages of magnetic damping, beams with sliding weights and a variety of weighing platforms. Commonly used for comparative weighing to determine the difference in mass between two objects, rather than their absolute value, these balances come equipped with built-in sliding masses. Harvard Trip balances are known for their accuracy and durability - constructed and precision-engineered for years of maintenance-free laboratory use.

Features:
- Highly versatile and rugged
- Two-pan design ideal for comparative weighing
- Built-in sliding masses

BALANCE LABAROTORY HARVARD DOUBLE BEAM
PART # 1550-SD
NSN 6670004017195

BALANCE LABORATORY HARVARD DOUBLE BEAM
PHYSICAL & ENVIRONMENTAL SPECIFICATIONS

Item Dimensions	**Height (Inches)**	**11**
	Width (Inches)	**15**
	Length (Inches)	**9**
	Cube (Cubic Feet)	**0.8594**
	Weight	**6.2 Lbs**
Ship Dimensions	**Height (Inches)**	
	Width (Inches)	
	Length (Inches)	
	Cube (Cubic Feet)	
	Weight	
Storage Temp		
Operating Temp		
Storage Humidity		
Operating Humidity		
Amps		
Watts		
Power Requirements	**N/A**	
Notes	**Capacity x Readability: 10g x 0.1g / 200g x 10g** **Platform construction: Stainless steel plate** **Platform size (diameter): 6 inches**	

BALANCE LABORATORY HARVARD DOUBLE BEAM
ACCESSORIES & CONSUMABLES - STARTUP

NSN	Notes	Nomenclature	MFR PN Ohaus Corp	DIST PN	QTY	UI	Unit Price	Total Price	Shelf Life Mon.
6670004017195		Balance Laboratory Harvard Double Beam	1550-SD		1	EA	$216.00	$216.00	N/A
7610015437003		Operation Manual	1347-02		1	EA	Incl w/NSN 7195	Incl w/NSN 7195	N/A

BALANCE LABORATORY HARVARD DOUBLE BEAM
ACCESSORIES & CONSUMABLES - RESUPPLY

NSN	Notes	Nomenclature	MFR PN Ohaus Corp	DIST PN	QTY	UI	Unit Price	Total Price	Shelf Life Mon.
6670008039680		Weight Set Scale Balance Brass Weight	12720		1	13/SE	$170.04	$170.04	N/A
7610015437003		Operation Manual	1347-02		1	EA	$0.00	$0.00	N/A

CENTRIFUGE LABORATORY 3400 RPM **TOC**

MANUFACTURER: BECTON DICKINSON AND COMP
Manufacturer Model# 420352
Manufacturer's PHONE: (410) 316-4000 FAX: (410) 316-4732
Manufacturer's Website: <http://www.bd.com/>

Item Web Link:
<http://catalog.bd.com/bdCat/viewProduct.doCustomer?productNumber=420352>

AAC 'J' ITEM NSN 6640-01-416-7345

UA's: 263C , 504B , N503 , N504 , N703 , N704

USAMMA POC: Customer Relations Management 301-619-4301/6901 - DSN 343-4301/6901
UNIT PRICE: $2,248.95

System Description: This unit has a high/low switch, electronic timer, brake switch and lid switch. This centrifuge also comes with a 12 place rotor which can accommodate from 10 X 75 mm to 12 X 75 mm tubes (not provided). The unit is portable and can be used for blood grouping, cross matching, coombs test and other cell washing procedures.

NOTE: FOR REPLACEMENT 12 PLACE ROTOR ORDER NSN 6640-00-445-1609 AND FOR REPLACEMENT 6 PLACE ROTOR ORDER NSN 6640-01-162-2949.

CENTRIFUGE LABORATORY 3400 RPM
PART # SERO-FUGE, 420352
NSN 6640014167345

12 PLACE ROTOR
PART # 420545

CENTRIFUGE LABORATORY 3400 RPM
PHYSICAL & ENVIRONMENTAL SPECIFICATIONS

Item Dimensions	**Height (Inches)**	**17**
	Width (Inches)	**13**
	Length (Inches)	**12**
	Cube (Cubic Feet)	**1.5347**
	Weight	**28 lbs.**
Ship Dimensions	**Height (Inches)**	
	Width (Inches)	
	Length (Inches)	
	Cube (Cubic Feet)	
	Weight	
Storage Temp		**41º F to 104º F**
Operating Temp		**41º F to 104º F**
Storage Humidity		**20% to 90%**
Operating Humidity		**20% to 90%**
Amps		**6.5**
Watts		**66**
Power Requirements	**115 VAC 50/60 Hz**	
Notes	**Max Speed: 3550 RPM High Speed / 2450 RPM Low Speed**	

CENTRIFUGE LABORATORY 3400 RPM
ACCESSORIES & CONSUMABLES - STARTUP

NSN	Notes	Nomenclature	MFR PN Becton Dickinson and Comp	DIST PN	QTY	UI	Unit Price	Total Price	Shelf Life Mon.
6640014167345		Centrifuge Laboratory 3400 RPM	420352		1	EA	$2,248.95	$2,248.95	N/A
6640004451609		12 Place Rotor	42-0545		1	EA	Incl w/NSN 7345	Incl w/NSN 7345	N/A
7610005437003		Literature, Operator	421337		1	EA	Incl w/NSN 7345	Incl w/NSN 7345	N/A

CENTRIFUGE LABORATORY 3400 RPM
ACCESSORIES & CONSUMABLES - RESUPPLY

NSN	Notes	Nomenclature	MFR PN Becton Dickinson and Comp	DIST PN	QTY	UI	Unit Price	Total Price	Shelf Life Mon.
6640004451609		12 Place Rotor	42-0545		1	EA	$205.33	$205.33	N/A
6640011622949		Head Lab Centrifuge 6 Place	420526		1	EA	$589.98	$589.98	N/A
7610005436723	Not Included W/NSN No NSN Required	Literature, Medical Maintenance	429624		1	EA	$152.00	$152.00	N/A
7610005437003		Literature, Operator	421337		1	EA	$10.00	$10.00	N/A

CENTRIFUGE LABORATORY 3400 RPM
WEB LINKS

Click Below for Equipment Support Plans. Note: Only available to personnel who reside in a Military (.mil) domain. Please select the plans you wish to receive and enter your email address. Support Plans include 10/20 Standards, maintenance intervals, Maintenance Allowance Chart, and more.

<http://www.usamma.army.mil/assets/apps/email_doc/email_doc_index.cfm>

CHAIR LOUNGE BLOOD DONOR ADJUSTABLE

TOC

MANUFACTURER: ARLINGTON SCIENTIFIC INC.
Manufacturer Model# PN-614
Manufacturer's PHONE: (801) 489-8911 FAX: (801) 489-5552
Manufacturer's Website: <http://www.arlingtonscientific.com>

Item Web Link:
<http://www.arlingtonscientific.com/shared/layouts/amazonian.jsp?_event=view&_id=120130_U131983__184898>

AAC 'L' ITEM NSN 6530-01-508-6662

UA's: 263C , 504B , N504 , N704

USAMMA POC: Customer Relations Management 301-619-4301/6901 - DSN 343-4301/6901
UNIT PRICE: $2,187.11

System Description: The chair has versatile, multiple donor positions; adjustable at both ends; moves to Trendelenburg (feet up) position rapidly; safe adjustments; left and right arm phlebotomy accessible arm draws possible; sets up in 30 seconds; folds into compact and balanced unit; available in height range of 18 to 32 inches; accommodates most manufactures armrests and scales.

Features:
- Caters to patient comfort, providing flat, 25º, or 50º positions.
- Strong, sturdy 2-inch aluminum frame: certified to hold 450 lbs.
- Marine-grade Dura-Cote fabric resists tearing.
- One-step Posi-Loc leg system; portable & lightweight.
- Head and footrest adjust to accommodate both left and right phlebotomy.
- Convenient detachable armrest (ships with armrest/tray); pillow included.
- Optional height to fit your needs: order from 18 to 32 inches (standard height is 24 inches).

CHAIR LOUNGE BLOOD DONOR ADJUSTABLE VERSATILE
PART # PN-614
NSN 6530015086662

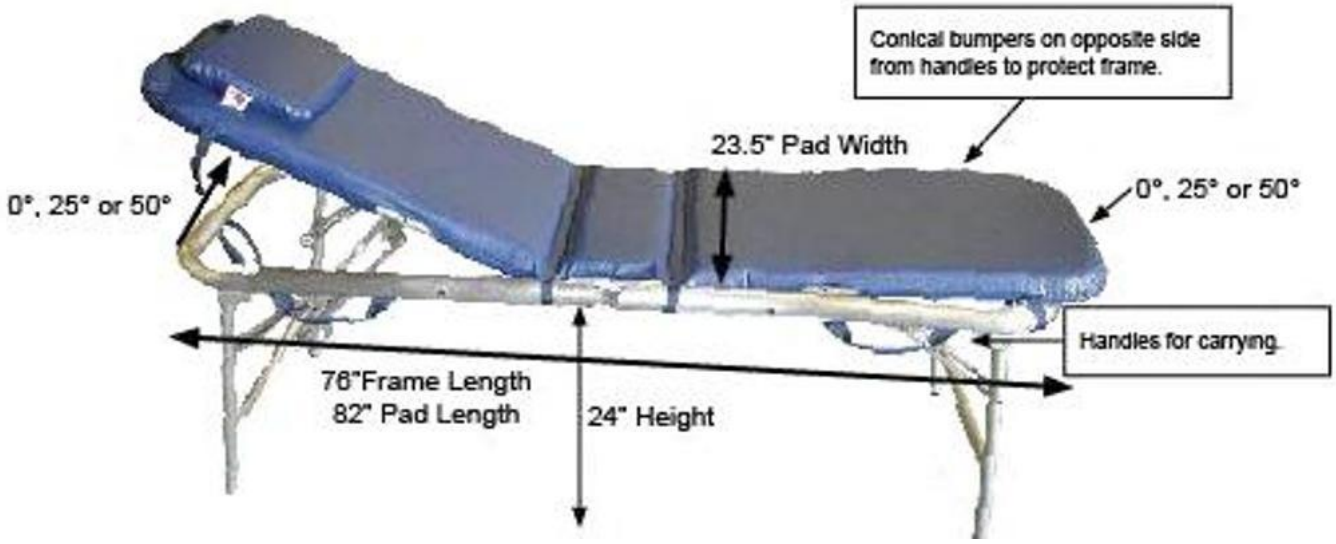

CHAIR LOUNGE BLOOD DONOR ADJUSTABLE VERSATILE
PART # PN-614

CHAIR LOUNGE ARMREST WITH TRAY
PART # 20614-800

CHAIR LOUNGE FOLDED FOR CARRYING

CHAIR LOUNGE BLOOD DONOR ADJUSTABLE
PHYSICAL & ENVIRONMENTAL SPECIFICATIONS

Item Dimensions	**Height (Inches)**	**24**
	Width (Inches)	**23.5**
	Length (Inches)	**82**
	Cube (Cubic Feet)	**26.7639**
	Weight	**35 Lbs**
Ship Dimensions	**Height (Inches)**	
	Width (Inches)	
	Length (Inches)	
	Cube (Cubic Feet)	
	Weight	
Storage Temp		
Operating Temp		
Storage Humidity		
Operating Humidity		
Amps		
Watts		
Power Requirements	**N/A**	
Notes	**Height listed does not include height of armrest or back and footrest if raised.**	

CHAIR LOUNGE BLOOD DONOR ADJUSTABLE
ACCESSORIES & CONSUMABLES - STARTUP

NSN	Notes	Nomenclature	MFR PN Arlington Scientific Inc.	DIST PN	QTY	UI	Unit Price	Total Price	Shelf Life Mon.
6530015086662		Chair Lounge Blood Donor Adjustable	PN-614		1	EA	$2,187.11	$2,187.11	N/A
6530015569168		Novax Armrest/Tray	20614-800		1	EA	Incl w/NSN 6662	Incl w/NSN 6662	N/A
6530015571537		Detachable Pillow	20614-725		1	EA	Incl w/NSN 6662	Incl w/NSN 6662	N/A
6530015774727		Replacement Cushion	20614-700		1	EA	Incl w/NSN 6662	Incl w/NSN 6662	N/A

CHAIR LOUNGE BLOOD DONOR ADJUSTABLE
ACCESSORIES & CONSUMABLES - RESUPPLY

NSN	Notes	Nomenclature	MFR PN Arlington Scientific Inc.	DIST PN	QTY	UI	Unit Price	Total Price	Shelf Life Mon.
6530015569168		Novax Armrest/Tray	20614-800		1	EA	$123.00	$123.00	N/A
6530015571537		Detachable Pillow	20614-725		1	EA	$45.00	$45.00	N/A
6530015774727		Replacement Cushion	20614-700		1	EA	$160.00	$160.00	N/A

CHAIR LOUNGE BLOOD DONOR ADJUSTABLE
WEB LINKS

Click Below for User Manual

<http://www.arlingtonscientific.com/download/123321_U131983__227271/NOVAX%20User%20Manual_.pdf>

Click Below for Product Brochure

<http://www.arlingtonscientific.com/download/123321_U131983__173861/Novax.pdf>

CONTAINER TRANSPORT THERMAL WOODLAND

TOC

MANUFACTURER: MINNESOTA THERMAL SCIENCE
Manufacturer Model# GH-WA-MTS-4U
Manufacturer's PHONE: (952) 884-3629 FAX: (763) 412-4801
Manufacturer's Website: <http://www.mnthermalscience.com>

Item Web Link:
<http://www.mnthermalscience.com/Products/Products_CredoSolutionFinder_Detail.aspx?pid=11>

AAC 'L' ITEM NSN 6530-01-505-5301

UA's: 263C , 504B , 905C , 912B , 921B , N504 , N704

USAMMA POC: Customer Relations Management 301-619-4301/6901 - DSN 343-4301/6901
UNIT PRICE: $2,971.25

System Description: The thermal container is used for storage and transport of blood, pharmaceuticals, reagents and vaccines in the field. Maintains internal temperature between 33.8° to 50° Fahrenheit for 48 plus hours in any environment. It can maintain 41 º Fahrenheit temperature for 96 hours. It requires no ice because of the combined performance of the Vacuum Insulated Panel (VIP) and the Thermal Isolation Chamber (TIC™). Canvas cover with strap included.

Features:
- Transports and stores up to 4 units of red blood cells (RBCs).
- Maintains RBCs at required temperature of between 33.8° F and 50°F for up to 60 hours, even in harsh environments.
- Requires no ice because of the combined performance of the Vacuum Insulated Panel (VIP) and the Thermal Isolation Chamber (TIC™).
- Weighs approximately 7 pounds, is highly portable and reusable.
- Payload dimensions: 6.0" x 5.0" x 4.25".
- Outside dimensions: 8.8" x 7.8" x 7.2".
- Additional applications include transport and/or storage of vaccines, other biologics, organs, reagents, and any other temperature-sensitive materials or products.

CONTAINER TRANSPORT THERMAL WOODLAND
PART # GH-WA-MTS-4U
NSN 6530015055301

CONTAINER TRANSPORT THERMAL WOODLAND
PHYSICAL & ENVIRONMENTAL SPECIFICATIONS

Item Dimensions	**Height (Inches)**	**8.8**
	Width (Inches)	**7.8**
	Length (Inches)	**7.2**
	Cube (Cubic Feet)	**0.286**
	Weight	**7 Lbs**
Ship Dimensions	**Height (Inches)**	**8.8**
	Width (Inches)	**7.8**
	Length (Inches)	**7.2**
	Cube (Cubic Feet)	**0.286**
	Weight	**7 Lbs**
Storage Temp		
Operating Temp		**33.8º F to 50º F for up to 60 hours in harsh environments**
Storage Humidity		
Operating Humidity		
Amps		
Watts		
Power Requirements	**N/A**	
Notes	**Payload Dimensions:** **Height: 6.0 inches** **Width: 5.0 inches** **Depth: 4.25 inches**	

CONTAINER TRANSPORT THERMAL WOODLAND ACCESSORIES & CONSUMABLES - STARTUP

NSN	Notes	Nomenclature	MFR PN Minnesota Thermal Science	DIST PN	QTY	UI	Unit Price	Total Price	Shelf Life Mon.
6530015055301		Container Transport Thermal Woodland	GH-WA-MTS-4U		1	EA	$2,971.25	$2,971.25	N/A
6530015055311		Chamber Thermal Isolation	GH-TIC-MTS-4U		1	EA	Incl w/NSN 5301	Incl w/NSN 5301	N/A

CONTAINER TRANSPORT THERMAL WOODLAND ACCESSORIES & CONSUMABLES - RESUPPLY

NSN	Notes	Nomenclature	MFR PN Minnesota Thermal Science	DIST PN	QTY	UI	Unit Price	Total Price	Shelf Life Mon.
6530015055311		Chamber Thermal Isolation	GH-TIC-MTS-4U		1	EA	$1,675.00	$1,675.00	N/A

INCUBATOR, DRY HEAT

TOC

DISTRIBUTOR: GSS INC.
MANUFACTURER: BOEKEL SCIENTIFIC
Manufacturer Model# 113002
Distributor's PHONE: (703) 734-1805 FAX: (703) 734-1803
Manufacturer's PHONE: (215) 396-8200 FAX: (215) 396-8264
Distributor's Website: <http://www.govsci.com>
Manufacturer's Website: <http://www.boekelsci.com/index.html>

Item Web Link:
<http://www.boekelsci.com/pages/products/drybath/pro_drybath_over.html>

AAC 'J' ITEM NSN 6640-01-564-7932

UA's: 212B , 221B , 263C , 504B , N503 , N703

USAMMA POC: Customer Relations Management 301-619-4301/6901 - DSN 343-4301/6901
UNIT PRICE: $735.40

System Description: Designed to accommodate an assortment of interchangeable Heating Block Modules. Incorporates a proportional integrative derivative (PID) controller for easy temperature selection, rapid heat-up and superb stability. Temperature can be set in 0.1ºC increments up to 120ºC. Temperature uniformity is +/- 0.25ºC @ 37ºC. The large LED display is easily seen throughout the lab.

Features:
- Temperature set in 0.1ºC increments up to120ºC
- PID Microprocessor controlled temperature selection
- Large LED Display
- Blocks are interchangeable between Analog and Digital Models
- "Set it and forget it"convenience Superb temperature stability
- Supplied with block extractor rod

INCUBATOR, DRY HEAT
PART # 113002
NSN 6640015647932

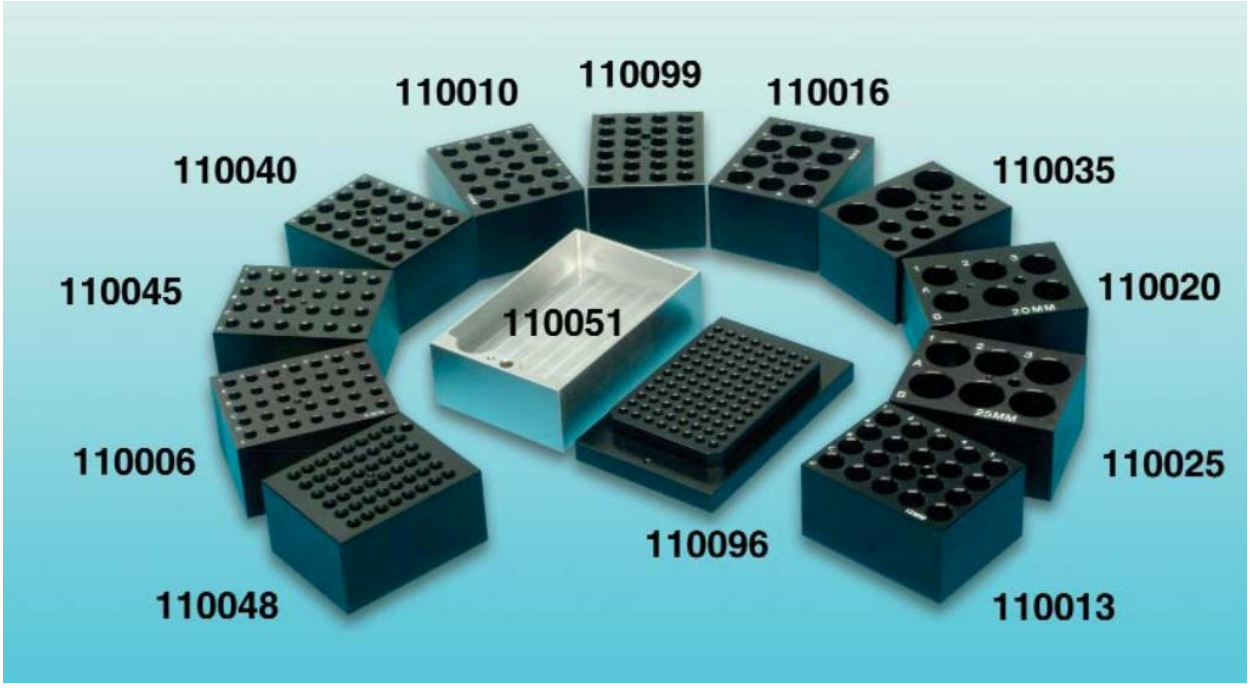

INCUBATOR BLOCKS
PART # 110013
110013 only is included with Incubator

HEATER BLOCK, 13MM 20 TUBES
PART # 110013
NSN 6640015695500

INCUBATOR, DRY HEAT
PHYSICAL & ENVIRONMENTAL SPECIFICATIONS

Item Dimensions	**Height (Inches)**	**3.5**
	Width (Inches)	**8**
	Length (Inches)	**9.8**
	Cube (Cubic Feet)	**0.1588**
	Weight	**5**
Ship Dimensions	**Height (Inches)**	**0**
	Width (Inches)	**0**
	Length (Inches)	**0**
	Cube (Cubic Feet)	**0**
	Weight	**5**
Storage Temp		
Operating Temp		**0.1°C to 120°C**
Storage Humidity		
Operating Humidity		
Amps		**1.74**
Watts		**200**
Power Requirements	**115 VAC 50/60Hz**	
Notes	**Uniformity +/- 0.25° @ 37°C**	

INCUBATOR, DRY HEAT
ACCESSORIES & CONSUMABLES - STARTUP

NSN	Notes	Nomenclature	MFR PN Boekel Scientific	DIST PN GSS Inc.	QTY	UI	Unit Price	Total Price	Shelf Life Mon.
6640015647932		Incubator, Dry Heat		113002	1	EA	$735.40	$735.40	N/A
6640015695500		Heater Block, 13mm 20 Tube	110013		2	EA	Incl w/NSN 7932	Incl w/NSN 7932	N/A

INCUBATOR, DRY HEAT
ACCESSORIES & CONSUMABLES - RESUPPLY

NSN	Notes	Nomenclature	MFR PN Boekel Scientific	DIST PN GSS Inc.	QTY	UI	Unit Price	Total Price	Shelf Life Mon.
6640015695500		Heater Block, 13mm 20 Tube	110013		2	EA	$66.47	$132.94	N/A

MICROSCOPE OPTICAL LABORATORY

TOC

MANUFACTURER: NIKON INC.
Manufacturer Model# ECLIPSE 50I-TE-4PA TILT HEAD MIC
Manufacturer's PHONE: (631) 547-8526 FAX: (631) 547-8652
Manufacturer's Website: <http://www.nikonusa.com>

Item Web Link:
<http://www.nikoninstruments.com/Products/Microscope-Systems/Upright-Microscopes/Biological/Eclipse-50i>

AAC 'J' ITEM NSN 6650-01-519-8473

UA's: 207A, 213B, 214B, 215B, 263C, 512A, 905C, 912B, 914B, N403, N436, N503, N504, N703, N704

USAMMA POC: Customer Relations Management 301-619-4301/6901 - DSN 343-4301/6901
UNIT PRICE: $7,657.01

System Description: A standard laboratory microscope for use in a variety of clinical specialty settings. Includes objectives at the following magnifications: 4X, 10X, 40X, and 100X. The light source (bulb), power cord, and optics are interchangeable with E400 (NSN 6650-01-501-2807.) The body tube contains an access port in back adaptable for use with a camera using "C" mount adapter. Includes case.

Features: Adaptable for:

- High resolution bright field
- Dark field
- EPI-Flourescence
- Phase contrast

MICROSCOPE OPTICAL LABORATORY GENERAL PURPOSE
PART # Eclipse 50i-TE-4PA Tilt Head Mic
NSN 6650015198473

CASE, HARDENED FOR 50I MICROSCOPE
PART # 92403
NSN 6650015557384

MICROSCOPE OPTICAL LABORATORY
PHYSICAL & ENVIRONMENTAL SPECIFICATIONS

Item Dimensions	**Height (Inches)**	**17**
	Width (Inches)	**12.7**
	Length (Inches)	**22**
	Cube (Cubic Feet)	**2.7487**
	Weight	**40 Lbs**
Ship Dimensions	**Height (Inches)**	**26.5**
	Width (Inches)	**26**
	Length (Inches)	**25**
	Cube (Cubic Feet)	**9.9682**
	Weight	**70 Lbs**
Storage Temp		**Not to exceed 105° F (40.5°C)**
Operating Temp		**50° F to 95° F (10°C to 35°C)**
Storage Humidity		**Less than 90% Non-Condensing**
Operating Humidity		**Less than 85% Non-Condensing**
Amps		**9**
Watts		**148**
Power Requirements	**110/220 VAC 50/60 Hz**	
Notes		

MICROSCOPE OPTICAL LABORATORY
ACCESSORIES & CONSUMABLES - STARTUP

NSN	Notes	Nomenclature	MFR PN Nikon Inc.	DIST PN	QTY	UI	Unit Price	Total Price	Shelf Life Mon.
6650015198473		Microscope Optical Laboratory	Eclipse 50i-TE-4PA Tilt Head Mic		1	EA	$7,657.01	$7,657.01	N/A
6240015429964		Bulb, Halogen	84246		1	EA	Incl w/NSN 8473	Incl w/NSN 8473	N/A
6650015426063		Power Cord, Grounded Three Wire	79035		1	EA	Incl w/NSN 8473	Incl w/NSN 8473	N/A
6650015557384		Case Hardened, shippable, for 50i/55i	92403		1	EA	Incl w/NSN 8473	Incl w/NSN 8473	N/A
7610015437003		Literature, Operation			1	EA	Incl w/NSN 8473	Incl w/NSN 8473	N/A

MICROSCOPE OPTICAL LABORATORY
ITEMS FOUND IN THE UNIT ASSEMBLAGE SUPPORTING THIS ITEM

NSN	Notes	Nomenclature	MFR PN Nikon Inc.	DIST PN	QTY	UI	Unit Price	Total Price	Shelf Life Mon.
6640002999807	In The UA	Immersion Oil Microscopy 1 oz bottle	16484		2	BT	$3.01	$6.02	48
6640004089915	In The UA	Box Microscope Slide Plastic 100 Slide Hinged Cover	03-448-5		1	EA	$18.96	$18.96	N/A
6640004260300		Forceps Microscope Cover Glass Tweezer 110mm	XX62-000-06		4	EA	$9.36	$37.44	N/A
6640004301000		Jar Biological Staining Coplin Glass Soda Lime H5 10 Slides	900470		6	EA	$30.10	$180.60	N/A
6640013867785		Rack Staining Microscope Tilt/Slide CRS Adjust 18-36in	S7676		1	EA	$346.83	$346.83	N/A

MICROSCOPE OPTICAL LABORATORY
ACCESSORIES & CONSUMABLES - RESUPPLY

NSN	Notes	Nomenclature	MFR PN Nikon Inc.	DIST PN	QTY	UI	Unit Price	Total Price	Shelf Life Mon.
6240015429964		Bulb, Halogen	84246		1	EA	$14.07	$14.07	N/A
6550001398300		Safranin O Stain Powder Certified Biological Stain 10gm	R-110		1	10GM/BT	$40.63	$40.63	24
6550008901567		Orange G Staining Solution 32oz	HT40132-1L		1	32 OZ/BT	$68.92	$68.92	24
6550012417009		India Ink Stain 0.75ml 50s	3569-26-7		1	50/PG	$46.28	$46.28	30
6550013348738		Cytology Fixative 3.5oz Can 12s	AQ109-05		1	12/PG	$36.86	$36.86	18
6550013585345		Blueing Solution Alkaline Buffered	2058-8705		1	1gal/BT	$38.54	$38.54	36

ACCESSORIES & CONSUMABLES - RESUPPLY

NSN	Notes	Nomenclature	MFR PN Nikon Inc.	DIST PN	QTY	UI	Unit Price	Total Price	Shelf Life Mon.
6550014153831		Crystal Violet Stain Powder 25g	F907-03		1	25g/BT	$45.13	$45.13	N/A
6550014645518		Hematoxylin Stain f/Progressive or Regressive	S7729-12		1	1gal/BT	$156.95	$156.95	36
6550014645542		Cytoplasmic Stain Polychromic Lower Concentration lt Green 1 Liter 2s	990166		1	12/PG	$68.24	$68.24	24
6550014645548		Cytoplasmic Stain Polychromic 1 Liter 2s	6766001		1	2/PG	$83.96	$83.96	24
6550014658793		Kit Differentiation Use f/Bone Marrow Smears FNA's & Parasites	990700		1	EA	$99.11	$99.11	6
6550014658808		Hematoxylin Stain G 64oz	65067-85		1	BT	$127.90	$127.90	36
6550014665751		Formalin Control Agent Plas Bag Cap of 2.5gl Tissue Waste Formula	F2.5		1	EA	$54.00	$54.00	N/A
6550014842018	In The UA	Stain Kit Dip Quick Used F/Rapid Blood Cell Differential Counts	85966		1	EA	$74.00	$74.00	N/A
6550014842037		Stain Urine Sediment	07-802-4612		1	EA	$22.73	$22.73	N/A
6640000744191	In The UA	Slide Microscope Plain Frosted End 75.4x25mm 72s	3703-2F		1	72/PG	$36.16	$36.16	N/A
6640002999807		Immersion Oil Microscopy 1 oz bottle	16484		2	BT	$3.01	$6.02	48
6640004089915		Box Microscope Slide Plastic 100 Slide Hinged Cover	03-448-5		1	EA	$18.96	$18.96	N/A
6640004223810		Dish Biological Staining 20 Slide w/Cover Tray & Tray Remover	29-6700		1	EA	$49.92	$49.92	N/A
6640004223815		Dish Biological Staining Glass D9 Horiz w/o Tray	29-6700-01		1	EA	$8.67	$8.67	N/A
6640004223820		Tray Biological Staining Dish Glass 0-300°C f/20 1x3in Slide	DDD431		1	EA	$53.61	$53.61	N/A
6640004260300		Forceps Microscope Cover Glass Tweezer 110mm	XX62-000-06		4	EA	$9.36	$37.44	N/A
6640004301000		Jar Biological Staining Coplin Glass Soda Lime H5 10 Slides	900470		6	EA	$30.10	$180.60	N/A
6640004361000		Paper Filter Qualitative 250mm Diameter Medium Not Folded 100s	4704H40		1	100/PG	$17.08	$17.08	N/A
6640004361500		Paper Filter Qualitative 380mm Diameter Pharmaceutical 100s	4704H60		1	100/PG	$52.11	$52.11	N/A
6640004365000		Paper Lens 1 Ream Tissue 11x7.5 inches	6640004365000		1	500/PG	$45.88	$45.88	N/A
6640006180066		Cover Glass Microscope Slide 22mm Square 1 oz.	M6020-2		1	22/PG	$81.06	$81.06	N/A
6640006180067		Cover Glass Microscope Slide 22x40mm 1oz	M6045-4		1	30/PG	$13.51	$13.51	N/A

ACCESSORIES & CONSUMABLES - RESUPPLY

NSN	Notes	Nomenclature	MFR PN Nikon Inc.	DIST PN	QTY	UI	Unit Price	Total Price	Shelf Life Mon.
6640006841345		Box Microscope Slide Plastic 25	03-448-10		1	EA	$14.55	$14.55	N/A
6640009736173		Box Microscope Slide Chipboard 20 slide	3450		1	EA	$41.44	$41.44	N/A
6640010140053		Slide Microscope Glass 3x1in w/Frosted One Side Cytol 144s	223031		1	144/PG	$36.89	$36.89	N/A
6640011191275		Mailing Case Section Microscope Slide Double Slot Chipboard 36s	12-587-16		1	36/PG	$128.15	$128.15	N/A
6640011648821		Cabinet Microscope Slide Steel Beige 4500 Slides	C101-TAN		1	EA	$114.40	$114.40	N/A
6640013438185		Box Microscope Slide Hinged Cover Holds 3x1in Slides 50 gauge 200s	12-569-35		1	200/PG	$104.72	$104.72	N/A
6640013867785		Rack Staining Microscope Tilt/Slide CRS Adjust 18-36in	S7676		1	EA	$346.83	$346.83	N/A
6640014537708		Immersion Oil Microscopy Cargille Design Type B 4 oz	2033-00		1	BT	$11.46	$11.46	N/A
6640014538567		Jar Biological Staining 4.5x2.3IN Used in Staining Specimens	2005-10		1	EA	$14.29	$14.29	N/A
6640014571912		Slide Microscope Superfrost 75x25mm 1mm Thick	12-544-7		1	144/PG	$38.65	$38.65	N/A
6640014673627		Slide Folder, 20 Slide 72s	2615		1	72/BX	$928.00	$928.00	N/A
6640014690806		Mailer Microscope Slide Plastic 83 x 29 x 15 MM Holds 5 Slides	6105A		1	EA	$15.60	$15.60	N/A
6645012751372		Timer Interval Electrical 0.1sec-10hrs Capacity	06-662-5		1	EA	$54.50	$54.50	N/A
6650009354247	In The UA	Shield Optical Microscope Vinyl 16x20' Collapsible	410801		1	EA	$72.38	$72.38	N/A
6650015426063		Power Cord, Grounded Three Wire	79035		1	EA	$10.89	$10.89	N/A
6650015557384		Case Hardened, shippable, for 50i/55i	92403		1	EA	$775.00	$775.00	N/A

MICROSCOPE OPTICAL LABORATORY WEB LINKS

Click Below for Equipment Support Plans. Note: Only available to personnel who reside in a Military (.mil) domain. Please select the plans you wish to receive and enter your email address. Support Plans include 10/20 Standards, maintenance intervals, Maintenance Allowance Chart, and more.

<http://www.usamma.army.mil/assets/apps/email_doc/email_doc_index.cfm>

REFRACTOMETER HAND

TOC

MANUFACTURER: REICHERT, INC.
Manufacturer Model# 1310400A
Manufacturer's PHONE: (716) 686-4500 FAX: (716) 686-4545
Manufacturer's Website: <http://www.reichert.com/>

Item Web Link:
<http://www.reichertai.com/products.html?productID=14>

AAC 'L' ITEM NSN 6650-00-933-3218

UA's: 263C, 505A, 512A, 905C, 912B, N503, N703

USAMMA POC: Customer Relations Management 301-619-4301/6901 - DSN 343-4301/6901
UNIT PRICE: $2,480.00

System Description: This is a high precision hand-held clinical refractometer which determines urine specific gravity, protein concentration in plasma or serum, and total solids in other aqueous solutions. Automatic temperature compensation provides accurate, reproducible results instantly using an hermetically sealed, liquid-filled prism that changes index with temperature. All readings are automatically temperature compensated which eliminates errors and additional work associated with measuring temperature and applying a correction factor or using a correction chart. The TS Meter provides readings with a degree of accuracy, reproducibility and speed significantly better than those obtained with urinometers or with nontemperature compensated instruments. Accuracy and reproducibility are comparable to those of more costly bench-type Abbe refractometers. No other hand-held refractometer offers such an exacting and precise compensation method.

Features:
- Designed according to the Goldbeg method of refractometry
- Urine specific gravity scale reading (range 1.000-1.035) with precision to 0.001 units
- Serum/plasma protein concentration (range 2.5-15 grams/100mL) with precision of 0.1 grams/100mL
- Refraction (0-320) with precision to 2
- Small sample required – just 0.005mL – for accurate analysis
- Accuracy and reproducibility comparable to benchtop refractometers

NOTE: A protective case is provided.

REFRACTOMETER HAND WITH CASE
PART # 1310400A
NSN 6650009333218

REFRACTOMETER HAND
PHYSICAL & ENVIRONMENTAL SPECIFICATIONS

Item Dimensions	**Height (Inches)**	**1.25**
	Width (Inches)	**1.25**
	Length (Inches)	**6.4**
	Cube (Cubic Feet)	**0.217**
	Weight	
Ship Dimensions	**Height (Inches)**	**0**
	Width (Inches)	**0**
	Length (Inches)	**0**
	Cube (Cubic Feet)	**0**
	Weight	**0.37 lbs.**
Storage Temp		**Never expose to temps above 150°F**
Operating Temp		**60°F to 100°F**
Storage Humidity		
Operating Humidity		
Amps		
Watts		
Power Requirements	**None**	
Notes		

REFRACTOMETER HAND
ACCESSORIES & CONSUMABLES - STARTUP

NSN	Notes	Nomenclature	MFR PN Reichert, Inc.	DIST PN	QTY	UI	Unit Price	Total Price	Shelf Life Mon.
6650009333218		Refractometer Hand	1310400A		1	EA	$2,480.00	$2,480.00	N/A
	NSN Not Required	Case, Refractometer	10400-063		1	EA	Incl w/NSN 3218	Incl w/NSN 3218	N/A
7610015437003	NSN Not Required	Literature, Operation	10400A-101		1	EA	Incl w/NSN 3218	Incl w/NSN 3218	N/A

REFRACTOMETER HAND
ACCESSORIES & CONSUMABLES - RESUPPLY

NSN	Notes	Nomenclature	MFR PN Reichert, Inc.	DIST PN	QTY	UI	Unit Price	Total Price	Shelf Life Mon.
	NSN Not Required	Case, Refractometer	10400-063		1	EA	$13.00	$13.00	N/A
6650014698979		Cover, Sample & Wire	10400-860		1	EA	$16.00	$16.00	N/A
6650015727447		Stand, Illuminated 110V w/Cord	13104060		1	EA	$490.00	$490.00	N/A
6650015727516		Lamp, Replacement for 110V Stand	13104070		1	EA	$10.00	$10.00	N/A

REFRACTOMETER HAND
WEB LINKS

Click Below for Product Brochure

<http://www.reichertai.com/files/brochures/1149781624.pdf>

Click Below for Operator Manual

<http://www.reichertai.com/files/manuals/1094740009.pdf>

REFRIGERATOR SOLID STATE BIO

TOC

MANUFACTURER: DOUBLEDAY ACQUISITIONS
Manufacturer Model# HMC-MIL-1
Manufacturer's PHONE: (937) 312-0114 FAX: (937) 312-1277
Manufacturer's Website: <http://www.AcuTemp.com>

Item Web Link:
<http://acutemp.com/products/acutemp-ax56l-mobile-refrigeratorfreezer>

AAC 'L' ITEM NSN 4110-01-506-0895

UA's: 009A, 107C, 207A, 213B, 220B, 263C, 267B, 504B, 912B, N503, N504, N703, N704, P302

USAMMA POC: Customer Relations Management 301-619-4301/6901 - DSN 343-4301/6901
UNIT PRICE: $5,560.00

System Description: The Refrigerator Solid State Bio (AcuTemp AX56L) mobile temperature management unit is designed to safely store and transport temperature sensitive blood, plasma, vaccines and other pharmaceutical and biotech products under the harshest environmental conditions. This versatile system precisely maintains payload temperatures with dual setting capability for 4°C (refrigeration) or -22°C (freezer) operation. Its ergonomic, rugged design makes the AcuTemp AX56L ideal for delivering lifesaving medical supplies quickly and safely to the point of need, whether in a mobile hospital or in the battlefield. The AcuTemp AX56L is designed to meet stringent military specifications including MIL-STD 810F and MIL-STD 461E.

Features:
- Precise temperature control under adverse conditions
- Easily transportable
- Can run on a variety of power sources including AC, DC, onboard batteries, and solar array
- Rugged design for demanding applications
- Available with Sled Rails, Wheels, or Skis

REFRIGERATOR SOLID STATE BIO
PART # HMC-MIL-1
NSN 4110015060895

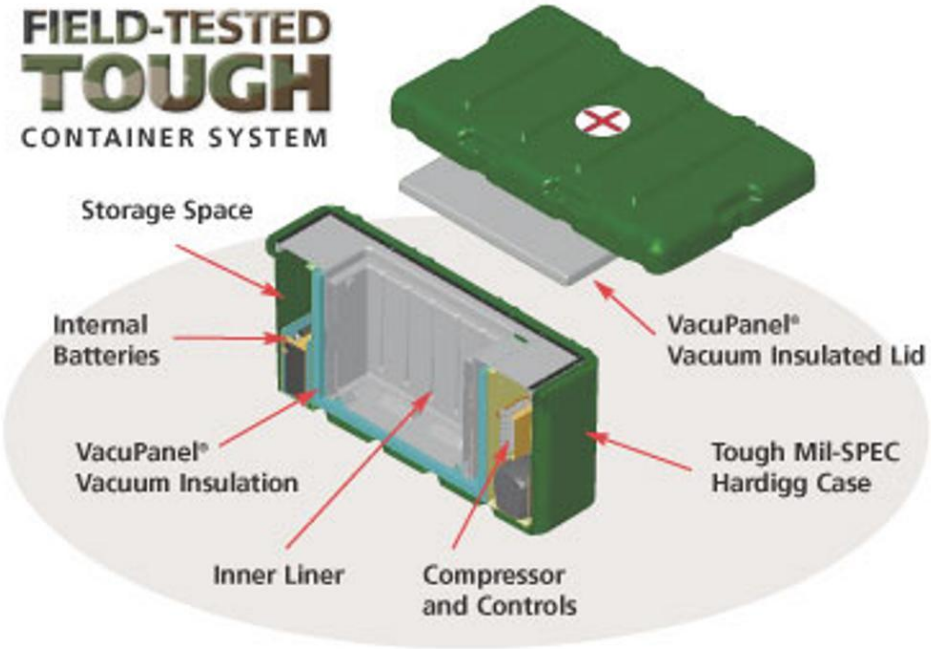

REFRIGERATOR SOLID STATE BIO DIAGRAM

REFRIGERATOR SOLID STATE BIO IN ACTION

REFRIGERATOR SOLID STATE BIO IN ACTION

BLOOD BAG BASKET
PART # 100000

REFRIGERATOR SOLID STATE BIO SHOWN WITH PLASMA
PART # HMC-MIL-1

REFRIGERATOR SOLID STATE BIO CONTROL PANEL

REFRIGERATOR SOLID STATE BIO SHOWN WITH VACCINE
PART # HMC-MIL-1

REFRIGERATOR SOLID STATE BIO
PHYSICAL & ENVIRONMENTAL SPECIFICATIONS

Item Dimensions	**Height (Inches)**	**21.8**
	Width (Inches)	**21**
	Length (Inches)	**37.5**
	Cube (Cubic Feet)	**9.9349**
	Weight	**145 Lbs**
Ship Dimensions	**Height (Inches)**	
	Width (Inches)	
	Length (Inches)	
	Cube (Cubic Feet)	
	Weight	
Storage Temp		**-22°F to 149°F (-30°C to 65°C)**
Operating Temp		**-4°F to 120°F (-20°C to 49°C)**
Storage Humidity		
Operating Humidity		
Amps		**0.55**
Watts		**55**
Power Requirements	**100/240 Volts AC, 46/63 Hz** **Battery (set of 2) - 12/24 VDC Internal 40 amp-hour**	
Notes	**Payload Dimensions** **Height: 13 inches** **Width: 14 inches** **Length: 18 inches** **Payload Volume** **2 cu ft (56.6 liters)** **Storage Capacity** **40 x 450ml or 60 x 250ml units**	

REFRIGERATOR SOLID STATE BIO
ACCESSORIES & CONSUMABLES - STARTUP

NSN	Notes	Nomenclature	MFR PN Doubleday Acquisitions	DIST PN	QTY	UI	Unit Price	Total Price	Shelf Life Mon.
4110015060895		Refrigerator Solid State Bio	HMC-MIL-1		1	EA	$5,560.00	$5,560.00	N/A
	See Resupply For NSN	Battery Gel	101880		2	EA	Incl w/NSN 0895	Incl w/NSN 0895	N/A
	See Resupply for NSN	Blood Basket	100000		10	EA	Incl w/NSN 0895	Incl w/NSN 0895	N/A
4110015188542		AC Power Cord	VXC-1-06		1	EA	Incl w/NSN 0895	Incl w/NSN 0895	N/A
6150015121007		DC Power Cord	100003		1	EA	Incl w/NSN 0895	Incl w/NSN 0895	N/A
7610005436723		Literature, Medical Maintenance	102011		1	EA	Incl w/NSN 0895	Incl w/NSN 0895	N/A
7610005437003		Literature, Manual	102010		1	EA	Incl w/NSN 0895	Incl w/NSN 0895	N/A

REFRIGERATOR SOLID STATE BIO
ACCESSORIES & CONSUMABLES - RESUPPLY

NSN	Notes	Nomenclature	MFR PN Doubleday Acquisitions	DIST PN	QTY	UI	Unit Price	Total Price	Shelf Life Mon.
4110015188252		Battery Gel	101880		1	EA	$60.00	$60.00	N/A
4110015188542		AC Power Cord	VXC-1-06		1	EA	$16.00	$16.00	N/A
6150015121007		DC Power Cord	100003		1	EA	$87.00	$87.00	N/A
6515015130792		Blood Basket	100000		1	EA	$16.44	$16.44	N/A
7610005436723		Literature, Medical Maintenance	102011		1	EA	$15.00	$15.00	N/A
7610005437003		Literature, Manual	102010		1	EA	$15.00	$15.00	N/A

REFRIGERATOR SOLID STATE BIO
WEB LINKS

Click Below for Equipment Support Plans. Note: Only available to personnel who reside in a Military (.MIL) domain. Please select the plans you wish to receive and enter your email address. Support Plans include 10/20 Standards, maintenance intervals, Maintenance Allowance Chart, and more.

<http://www.usamma.army.mil/assets/apps/email_doc/email_doc_index.cfm>

REFRIGERATOR SOLID STATE BIO
ITEM TABLES

Features and Benefits

Features	Benefits
Dual operating modes for 4°C and -22°C operation	Ideal for both blood or plasma storage and transport
Multiple power source options are built into a single design and include grid, battery and solar array	Versatility to operate globally via any power source
Rugged, military spec design	Eliminates ingress of water and dirt and won't fail under the duress of military transportation
Built with ThermoCor® high performance insulation	AcuTemp AX56L can maintain internal temperatures at required levels for up to 48 hours with internal batteries only
High payload volume	Two cubic feet of payload volume (can store 60 250 ml units or 40 450 ml units of blood)
Data logging with RS232 and IR data port capability	Internal temperatures are continuously logged to ensure payload integrity; flexible data export options meet varying data capture requirements
LCD display	Highly visible LCD display shows internal temperature, battery condition and data log information for assured payload integrity

Specifications

Specifications	Value
Payload Volume	56.6 liters (2 ft^3)
Payload Bay Dimensions	33.0 cm H x 35.6 cm W x 45.7 cm L (13 in H x 14 in W x 18 in L)
External Dimensions	55.4 cm H x 53.3 cm W x 95.2 cm L (21.8 in H x 21 in W x 37.5 in L)
Empty Weight	64.5 kg (142 lb)
Payload Capacity	40 x 450 ml units or 60 x 250 ml units

REFRIGERATOR UNDERCOUNTER

TOC

MANUFACTURER: SO-LOW ENVIRONMENTAL
Manufacturer Model# MV4-6UCR
Manufacturer's PHONE: (513) 772-9410 FAX: (513) 772-0570
Manufacturer's Website: <http://www.so-low.com>

Item Web Link:
<http://www.so-low.com/undercounter_refrigerator.htm>

AAC 'L' ITEM NSN 4110-01-504-1157

UA's: 213B, 214A, 214B, 215B, 218A, 218B, 220B, 261A, 263C, P302

USAMMA POC: Customer Relations Management 301-619-4301/6901 - DSN 343-4301/6901
UNIT PRICE: $1,374.90

System Description: Refrigeration for Health, Science and Industry. Durable commercial grade construction assures dependable performance and long operational life.

Models cool quickly and efficiently to avoid temperature fluctuations that can result in failure of expensive research, misleading test results, or weakened medicines, vaccines, and reagents.

General purpose undercounter models are Commercial UL and CUL listed. Hazardous location and flammable material storage models have appropriate UL listings. All refrigerators use non-CFC R134a refrigerant.

General purpose models can be built into casework and under lab benches.

Features:
- Capacity 6.1 cu ft/173 liters
- Temperature range 1°C to 7°C
- Commercial UL listed
- Auto Defrost
- Forced air ventilation through front grille
- No additional clearance required to build in undercounter
- R134a refrigeration system
- 3 in-door shelves
- Double insulated power cord with three prong green dot hospital grade plug
- Exterior 22 gauge steel powder coat paint finish
- Interior vacuum form high impact polystyrene - seamless with rounded corners for easy cleaning

REFRIGERATOR UNDERCOUNTER 6.1 CU FT
PART # MV4-6UCR
NSN 4110015041157

REFRIGERATOR UNDERCOUNTER 6.1 CU FT
PART # MV4-6UCR
NSN 4110015041157

REFRIGERATOR UNDERCOUNTER
PHYSICAL & ENVIRONMENTAL SPECIFICATIONS

Item Dimensions	**Height (Inches)**	**34**
	Width (Inches)	**24**
	Length (Inches)	**24**
	Cube (Cubic Feet)	**11.3333**
	Weight	**120 Lbs**
Ship Dimensions	**Height (Inches)**	**0**
	Width (Inches)	**0**
	Length (Inches)	**0**
	Cube (Cubic Feet)	**0**
	Weight	
Storage Temp		
Operating Temp		
Storage Humidity		
Operating Humidity		
Amps		**3.3**
Watts		**379.5**
Power Requirements	**115 VAC 50/60 Hz**	
Notes		

REFRIGERATOR UNDERCOUNTER
ACCESSORIES & CONSUMABLES - STARTUP

NSN	Notes	Nomenclature	MFR PN So-Low Environmental	DIST PN	QTY	UI	Unit Price	Total Price	Shelf Life Mon.
4110015041157		Refrigerator Undercounter	MV4-6UCR		1	EA	$1,374.90	$1,374.90	N/A

REFRIGERATOR UNDERCOUNTER
ACCESSORIES & CONSUMABLES

NO RESUPPLY ITEMS

REFRIGERATOR-FREEZER

TOC

MANUFACTURER: NORTHLAND-MARVEL
Manufacturer Model# 6CRF0610
Manufacturer's PHONE: (616) 754-5601 FAX: (616) 754-0970
Manufacturer's Website: <www.marvelscientific.com>

Item Web Link:
<http://www.marvelscientific.com/prod-combo.php>

AAC 'L' ITEM NSN 4110-01-425-8009

UA's: 263C, 273A, 623A, 905C, 912B, 913B, 914B, N306, N321, N413, N503, N506, N513, N703, N706, N713, N725, P308, P309, P310

USAMMA POC: Customer Relations Management 301-619-4301/6901 - DSN 343-4301/6901
UNIT PRICE: $2,219.18

System Description: Six cubic foot under counter refrigerator/freezer fits easily under lab benches and casework.

Features: Forced air ventilation eliminates need for clearance space in built-in applications. Manual defrost, 5.3 cubic foot refrigerator capacity and 0.7 cubic foot freezer capacity. Dual voltage capable, carrying handles and olive drab paint scheme.

REFRIGERATOR-FREEZER MECHANICAL FIELD WARD
PART # 6CRF0610
NSN 4110014258009

REFRIGERATOR-FREEZER
PHYSICAL & ENVIRONMENTAL SPECIFICATIONS

Item Dimensions	**Height (Inches)**	**35.5**
	Width (Inches)	**24.75**
	Length (Inches)	**25.5**
	Cube (Cubic Feet)	**12.9658**
	Weight	**120 Lbs**
Ship Dimensions	**Height (Inches)**	**35.5**
	Width (Inches)	**24.75**
	Length (Inches)	**25.5**
	Cube (Cubic Feet)	**12.9658**
	Weight	**120 Lbs**
Storage Temp		
Operating Temp		
Storage Humidity		
Operating Humidity		
Amps		**2.66**
Watts		**320 Normal - 1200 Surge**
Power Requirements	**120/220 VAC 50/60 Hz**	
Notes	**Uses R-134A Refrigerant**	

REFRIGERATOR-FREEZER
ACCESSORIES & CONSUMABLES - STARTUP

NSN	Notes	Nomenclature	MFR PN Northland-Marvel	DIST PN	QTY	UI	Unit Price	Total Price	Shelf Life Mon.
4110014258009		Refrigerator-Freezer	6CRF0610		1	EA	$2,219.18	$2,219.18	N/A
7610015437003		Literature, Operator	41011992		1	EA	Incl w/NSN 8009	Incl w/NSN 8009	N/A

REFRIGERATOR-FREEZER
ACCESSORIES & CONSUMABLES

NO RESUPPLY ITEMS

VIEWER AGGLUTINATION

TOC

DISTRIBUTOR: CARDINAL HEALTH
MANUFACTURER: BECTON DICKINSON AND COMP
Distributor Model# L6045-1A
Manufacturer Model# 430630
Distributor's PHONE: (614) 757-5000 FAX: (847) 689-1742
Manufacturer's PHONE: (410) 316-4000 FAX: (410) 316-4732
Distributor's Website: <http://www.cardinal.com>
Manufacturer's Website: <http://www.bd.com/>

Item Web Link:
<http://www.bd.com/ds/productCenter/420630.asp>

AAC 'Y' ITEM NSN 6640-01-500-8779

UA's: 263C , 504B , N504 , N704

USAMMA POC: Customer Relations Management 301-619-4301/6901 - DSN 343-4301/6901
UNIT PRICE: $487.02

System Description: Use this test tube viewer for blood typing, cross matching, prothrombin time, Kahn and other agglutinations, flocculation and serodiagnostic tests. Viewer provides a magnified view of the undersurface of test tube contents and permits an easier and more accurate reading than a magnifying lens. Test tube contents are illuminated from above by a 5 watt bulb and from below by a magnifying mirror. Complete with bulb and magnifying mirror. (Positions of both lamp and mirror are adjustable.)

NOTE: Power Pack and operating/service manuals can not be ordered separately but are supplied with Agglutination Viewer.

VIEWER AGGLUTINATION TEST TUBE
PART # L6045-1A
NSN 6640015008779

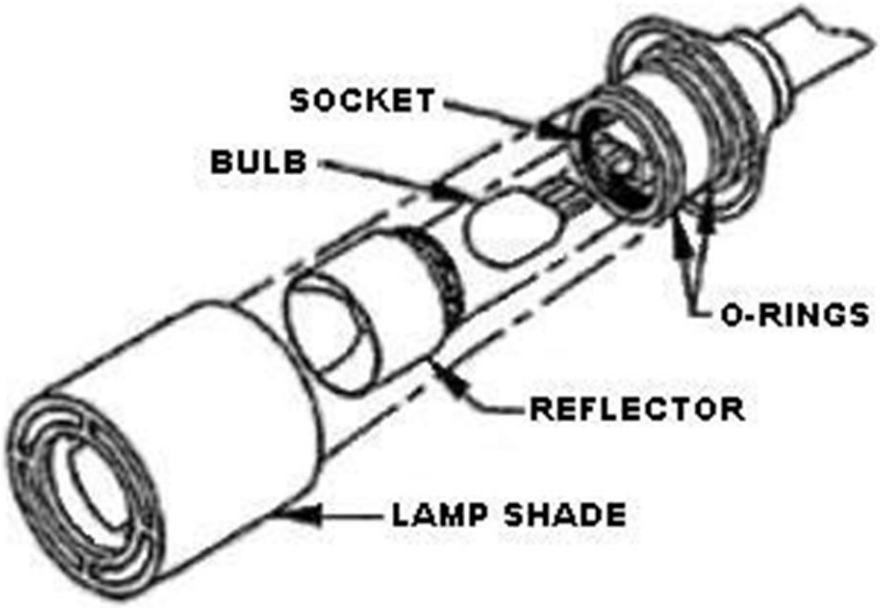

VIEW AGGLUTINATION TEST TUBE BULB
PART # L6045-5A

VIEWER AGGLUTINATION
PHYSICAL & ENVIRONMENTAL SPECIFICATIONS

Item Dimensions	**Height (Inches)**	**14**
	Width (Inches)	**4.5**
	Length (Inches)	**7**
	Cube (Cubic Feet)	**0.2552**
	Weight	**2.5 lbs.**
Ship Dimensions	**Height (Inches)**	**5.6**
	Width (Inches)	**8.25**
	Length (Inches)	**9.45**
	Cube (Cubic Feet)	**0.2527**
	Weight	**3.22 lbs.**
Storage Temp		**-4° F to 149° F**
Operating Temp		**64.4° F to 91.4° F**
Storage Humidity		**20% to 85% Non-condensing**
Operating Humidity		**20% to 85% Non-condensing**
Amps		**500 mA**
Watts		**6**
Power Requirements	**12 VAC 50/60 Hz**	
Notes		

VIEWER AGGLUTINATION
ACCESSORIES & CONSUMABLES - STARTUP

NSN	Notes	Nomenclature	MFR PN Becton Dickinson and Comp	DIST PN Cardinal Health	QTY	UI	Unit Price	Total Price	Shelf Life Mon.
6640015008779		Viewer Agglutination			1	EA	$487.02	$487.02	N/A
6515015085992		Mirror Assembly	421485		1	EA	Incl w/NSN 8779	Incl w/NSN 8779	N/A
7610005437003		Literature, Operator/Maintenance	MA-0129-A		1	EA	Incl w/NSN 8779	Incl w/NSN 8779	N/A
NSN Not Available		Power Pack	421486		1	EA	Incl w/NSN 8779	Incl w/NSN 8779	N/A
See Resupply		Bulb 115V, 5W		L6045-5A	1	EA	Incl w/NSN 8779	Incl w/NSN 8779	N/A

VIEWER AGGLUTINATION
ACCESSORIES & CONSUMABLES - RESUPPLY

NSN	Notes	Nomenclature	MFR PN Becton Dickinson and Comp	DIST PN Cardinal Health	QTY	UI	Unit Price	Total Price	Shelf Life Mon.
6240014866247		Bulb 115V, 5W	421484	L6045-5A	1	2/PG	$26.96	$26.96	N/A
6515015085992		Mirror Assembly	421485		1	EA	$117.75	$117.75	N/A