TECHNICAL MANUAL

UNIT, DIRECT SUPPORT, AND GENERAL SUPPORT MAINTENANCE MANUAL

(INCLUDING REPAIR PARTS AND SPECIAL TOOLS LIST)

LIGHT, SURGICAL, FIELD MODEL 2410MB

6530-01-343-2033

APPROVED FOR PUBLIC RELEASE; DISTRIBUTION IS UNLIMITED

HEADQUARTERS, DEPARTMENT OF THE ARMY

23 APRIL 1993

SAFETY STEPS TO FOLLOW IF SOMEONE IS THE VICTIM OF ELECTRICAL SHOCK

Do not try to pull or grab the individual.

If possible, turn off the electrical power.

If you cannot turn off the electrical power, pull, push, or lift the person to safety using a dry wooden pole or a dry rope, or some other insulating material.

Send for help as soon as possible.

After the injured person is free of contact with the source of electrical shock, move the person a short distance away and immediately start artificial resuscitation.

Throughout this manual are WARNINGS, CAUTIONS, and NOTES. Please take time to read these. They are there to protect you and the equipment.

WARNING

Procedures which must be observed to avoid personal injury, and even loss of life.

CAUTION

Procedures which must be observed to avoid damage to equipment, destruction of equipment, or long-term health hazards.

NOTE

Essential information that should be remembered.

ELECTRICAL AND ELECTRONIC HAZARDS

- Severe injury or death can result when any part of your body comes in contact with live electrical circuits. Medical Equipment Repairers must be especially alert to the dangers of exposed circuits, terminals, power panels, and the like.

- The electrical phenomenon that injures and kills is CURRENT; the force that caused current to flow is called VOLTAGE. Voltage ratings are normally assigned to live electrical circuits, power supplies, and transmission lines. You should consider all voltages of 30 or more to be hazardous.

- The physiological effect of current flowing through the human body is related to the following factors:

  - The path of the current through the body.
  - The magnitude of the current.
  - The duration of the voltage shock or discharge that causes current flow.
  - The frequency of the voltage if alternating current.
  - The susceptibility of damage to your heart from the current and from repeated shocks.

- Alternating current tends to concentrate near the body's surface because of the phenomenon of "skin effect." The higher the frequency of the alternating current voltage source, the more likely the current will tend to flow in or near the skin and away from internal body organs.

- The effect of current becomes more severe with the length of time that it flows through the body; a prolonged current flow can cause severe internal burns, collapse, unconsciousness, or death.

TECHNICAL MANUAL

NO. 8-6530-010-24&P

HEADQUARTERS
DEPARTMENT OF THE ARMY
WASHINGTON, DC 23 APRIL 1993

UNIT, DIRECT SUPPORT, AND GENERAL SUPPORT MAINTENANCE MANUAL (INCLUDING REPAIR PARTS AND SPECIAL TOOLS LIST) LIGHT, SURGICAL, FIELD MODEL 2410MB

6530-01-343-2033

You can help improve this manual. If you find any mistakes or if you know a way to improve procedures, please let us know. Mail your memorandum, DA Form 2028 (Recommended Changes to Publications and Blank Forms), or DA Form 2028-2 (Recommended Changes to Equipment Technical Publications) located in the back of this manual, to: Commander, U.S. Army Medical Materiel Agency, ATTN: SGMMA-M, Frederick, MD 21702-5001. A reply will be furnished directly to you.

Approved for public release; distribution is unlimited.

TABLE OF CONTENTS

			Page
		HOW TO USE THIS MANUAL	v
CHAPTER	1.	INTRODUCTION	
Section	I.	General Information	1-1
	II.	Equipment Description and Data	1-3
	III.	Principles of Operation	1-7
CHAPTER	2.	OPERATING INSTRUCTIONS	
Section	I.	Surgical Light Operation	2-1
	II.	Operational Factors	2-2
	III.	Operation of Auxiliary Equipment	2-3
	IV.	Cleaning, Disinfecting, and Sterilizing Procedures	2-3
	V.	Operation Under Unusual Conditions	2-5

CHAPTER 3. UNIT LEVEL MAINTENANCE

Section I. General Information 3-1
II. Service Upon Receipt of Equipment 3-1
III. Lubrication Instructions 3-4
IV. Preventive Maintenance Checks and Services 3-5
V. Battery Information 3-7
VI. Troubleshooting 3-8
VII. Mechanical Adjustments 3-9
VIII. Calibration Procedures 3-13
IX. Component Replacement Procedures 3-16
X. Repair Procedures 3-19
XI. Storage and Shipment Procedures 3-30

CHAPTER 4. DIRECT SUPPORT AND GENERAL SUPPORT MAINTENANCE

Section I. General Information 4-1
II. Troubleshooting 4-1

APPENDIX A. REFERENCES A-1
B. MAINTENANCE ALLOCATION CHART B-1
C. COMPONENTS OF END ITEM AND BASIC ISSUE ITEMS LISTS C-1
D. EXPENDABLE AND DURABLE SUPPLIES AND MATERIALS LIST D-1
E. REPAIR PARTS AND SPECIAL TOOLS LISTS E-1
F. ADDITIONAL AUTHORIZATION LIST F-1

GLOSSARY GLOSSARY-1

INDEX INDEX-1

LIST OF ILLUSTRATIONS

Figure No.	*Title*	*Page*
1-1	Light, surgical, field	1-1
1-2	Base assembly	1-3
1-3	Support posts	1-3
1-4	Arm assembly	1-4
1-5	Lighthead	1-4
1-6	Manufacturer data plate	1-5
1-7	Breather valve instruction decal	1-5
1-8	Explosion hazard decal	1-6
1-9	Warning plate	1-6
2-1	Electrical connections	2-1
2-2	Rotational and angular movements	2-2
2-3	Moving the surgical light	2-3
2-4	Cleaning optical surfaces	2-4
2-5	Electrical receptacle configuration	2-5

Figure No.	Title	Page
3-1	Chest and surgical light components	3-2
3-2	Attaching wheels	3-3
3-3	Installing lower support post	3-3
3-4	Installing upper support post	3-3
3-5	Mounting the lighthead and arm assembly	3-3
3-6	Protective foam pad removal	3-4
3-7	Handle	3-4
3-8	Lighthead and power cables	3-4
3-9	Battery charging	3-7
3-10	Mechanical adjustments	3-10
3-11	Lighthead cover	3-10
3-12	Pivot adjustment	3-10
3-13	Yoke pin adjustment	3-11
3-14	Friction adjustment	3-12
3-15	Surgical light adjustment	3-12
3-16	Switching power supply	3-13
3-17	24-volt potentiometer adjustment	3-13
3-18	Linear power supply connections	3-14
3-19	28.2-volt potentiometer adjustment	3-14
3-20	Lighthead cover	3-15
3-21	Lighthead height adjustment	3-15
3-22	Illumination adjustments	3-16
3-23	Focus measurements	3-16
3-24	Diffusion lens removal/replacement	3-16
3-25	Heat filter removal/replacement	3-17
3-26	Heat filter	3-17
3-27	Lamp installation	3-17
3-28	Heat filter	3-18
3-29	Fuses	3-19
3-30	Rocker switch	3-20
3-31	Electrical color-coded wiring	3-20
3-32	Diffusion lens removal/replacement	3-21
3-33	Lighthead cover	3-21
3-34	Reflector removal	3-21
3-35	Heat sink assembly	3-22
3-36	Reflector alignment	3-22
3-37	Arm assembly	3-22
3-38	Rocker switch	3-24
3-39	Electrical color-coded wiring	3-24
3-40	Washer assembly	3-25
3-41	Heat filter removal	3-26
3-42	Lighthead cover	3-26
3-43	Rocker switch	3-27
3-44	Electrical color-coded wiring	3-27
3-45	Yoke gasket	3-27

Figure No.	Title	Page
3-46	Electrical contact retaining ring	3-28
3-47	Yoke disassembly/assembly	3-28
3-48	Heat sink casting and electrical contact retaining ring	3-28
3-49	Yoke gasket	3-29
3-50	Rocker switch	3-29
3-51	Lighthead cover	3-29
3-52	Heat filter installation	3-30
3-53	Diffusion lens removal/replacement	3-30
3-54	Relay PCB	3-32
3-55	Electrical block diagram	3-33
3-56	Power supply wiring diagram	3-34
E-1	Surgical light	E-2
E-2	Arm and lighthead assembly	E-4
E-3	Lighthead assembly	E-8
E-4	Reflector assembly	E-12
E-5	Lower post assembly	E-16
E-6	Base assembly	E-18
E-7	Relay PCB components	E-22

LIST OF TABLES

Table No.	Title	Page
1-1	Nomenclature cross-reference list	1-2
1-2	Specifications	1-4
1-3	Physical characteristics	1-5
1-4	Manufacturing variations	1-6
3-1	Preventive maintenance checks and services	3-5
3-2	General troubleshooting	3-8

HOW TO USE THIS MANUAL

- This manual provides all the information needed to understand the capabilities, functions, and characteristics of this equipment. It describes how to set up, operate, test, and repair the equipment. You must familiarize yourself with the entire manual before operating or beginning a maintenance task.

- The manual is arranged by chapters, sections, and paragraphs followed by appendixes, a glossary, an index, and DA Forms 2028-2. Use the table of contents to help locate the chapter or section for the general subject area needed. The index will help locate more specific subjects.

- Multiple figures and tables are provided for your ease in using this manual. Words that are both capitalized and in quotation marks are names of components or words that you will actually see on the equipment.

- Chapter 3 provides a systematic method of inspecting and servicing the equipment. In this way, small defects can be detected early before they become a major problem causing the equipment to fail. Make a habit of doing the checks and services in the same order each time and anything wrong will be detected quickly.

- Specific direct support and general support maintenance instructions are included. Only perform maintenance functions specified in the maintenance allocation chart for your level of maintenance. Maintenance functions specified for higher levels of maintenance frequently require additional training; test, measurement, and diagnostic equipment; or tools.

CHAPTER 1

INTRODUCTION

Section I. GENERAL INFORMATION

1-1. Scope.

This manual describes the surgical light (fig 1-1); provides equipment technical data; and provides operational and maintenance functions, services, and actions. Additional information follows:

a. Type of manual. Unit, direct support (DS), and general support (GS) maintenance (including repair parts and special tools lists).

b. Model number and equipment name. Model number 2410MB, Light, Surgical, Field.

c. Purpose of equipment. To illuminate surgical sites for optimal visualization of small, low-contrast objects at varying depths in body cavities or incisions. The surgical light is designed to reduce shadows and minimize color distortion.

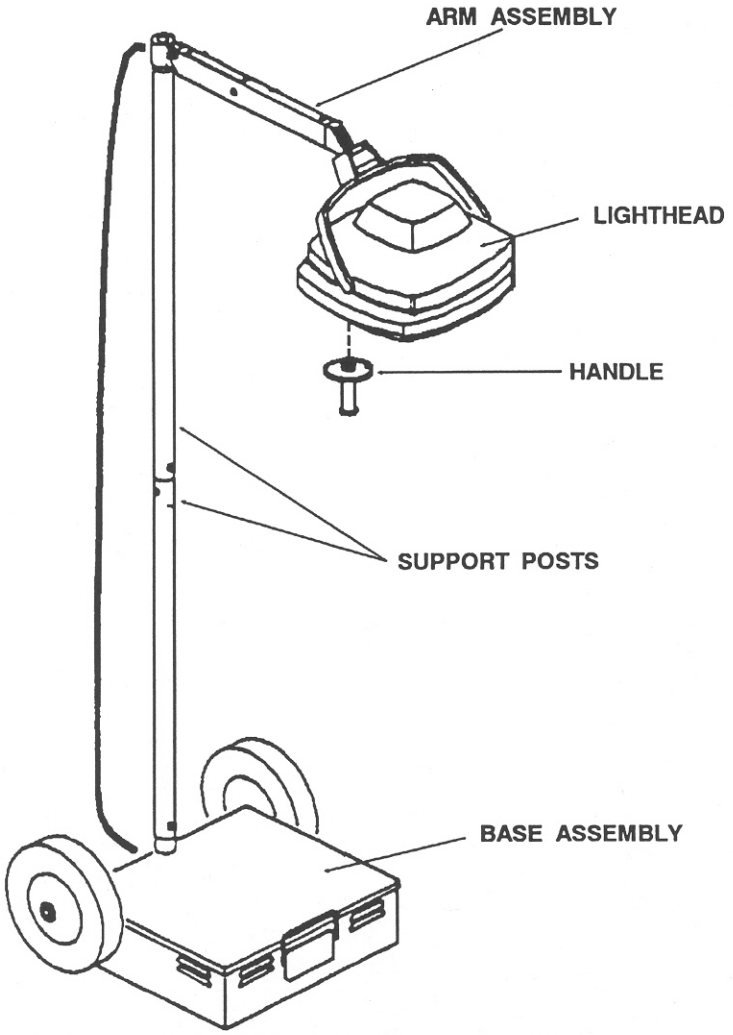

Figure 1-1. Light, surgical, field.

1-2. Explanation of abbreviations and terms.

Special or unique abbreviations, acronyms, and terms used within this manual are explained in the glossary.

1-3. Maintenance forms, records, and reports.

TB 38-750-2 prescribes forms, records, reports, and procedures.

1-4. Destruction of Army materiel to prevent enemy use.

AR 40-61 contains instructions for destruction and disposal of Army medical materiel. Also, the SB 8-75 series provides periodic information and/or instructions on the destruction of medical materiel.

1-5. Administrative storage.

a. Place the surgical light in administrative storage for only short periods of time when a shortage of maintenance effort exists. This equipment should be in mission readiness condition within 24 hours or within the time factors determined by the directing authority. During the storage period, keep appropriate maintenance records.

b. Perform preventive maintenance checks and services (PMCS) listed in table 3-1 before placing Army equipment in administrative storage. When equipment is removed from storage, perform PMCS to ensure its operational readiness.

c. Inside storage is preferred for equipment selected for administrative storage.

1-6. Preparation for storage or shipment.

Procedures to prepare the surgical light for storage or shipment are listed in chapter 3, section XI.

1-7. Quality assurance or quality control (QA or QC).

TB 740-10/DLAM 4155.5/AFR 67-43 contains QA or QC requirements and procedures.

1-8. Nomenclature cross-reference list.

Table 1-1 identifies official versus commonly used nomenclatures.

Table 1-1. Nomenclature cross-reference list.

Common name	*Official nomenclature*
Arm assembly	Counterbalance arm assembly
Axle pin	Pin, self-locking, quick-release
Gas spring	Cylinder assembly
Heat filter	Cylindrical glass heat filter
Lighthead cable	Lighthead cable assembly
Pointed star screw	Six point screw (hex)
Power cable	Electrical power cable assembly
Surgical light	Light, surgical, field
Wiring sleeve	Tubing, plastic

1-9. Reporting and processing medical materiel complaints and/or quality improvement reports.

AR 40-61 prescribes procedures for submitting medical materiel complaints and/or quality improvement reports for the surgical light.

1-10. Warranty information.

A warranty is not applicable.

Section II. EQUIPMENT DESCRIPTION AND DATA

1-11. Equipment characteristics, capabilities, and features.

a. The surgical light is a portable, floor-standing, operating and examining light suitable for use in divisional medical units, International Standards Organization (ISO) shelters, or other medical treatment facilities.

b. The surgical light consists of a lighthead, arm assembly, support posts, base assembly, and storing/shipping chest. The arm assembly enables the lighthead to be positioned for medical procedures. The lighthead pivots provide angular and rotational adjustments.

c. The surgical light is capable of operating from multiple voltages and frequencies as specified in table 1-3. The input voltage range is detected and automatically selected by the switching power supply in the base assembly.

d. Wheels, mounted on the base assembly, provide portability and transport over uneven floor surfaces in field environments.

e. Sealed, lead-acid, back-up batteries of the starved electrolyte type are mounted in the base assembly to provide electrical power to the lighthead in case of an external electrical power interruption.

1-12. Component descriptions.

a. Base assembly (fig 1-2). The base assembly includes the base enclosure, two 10-inch diameter semi-pneumatic wheels, and the support post mount. The base enclosure houses the electronic components, back-up batteries, and various electrical receptacles. The base is designed and sufficiently heavy to preclude the surgical light from tipping over throughout the full range of lighthead and arm assembly positions.

b. Support posts (fig 1-3). The support posts fasten together and support the lighthead and arm assembly on the base assembly. A spring-loaded locking mechanism is used to lock the two support posts together.

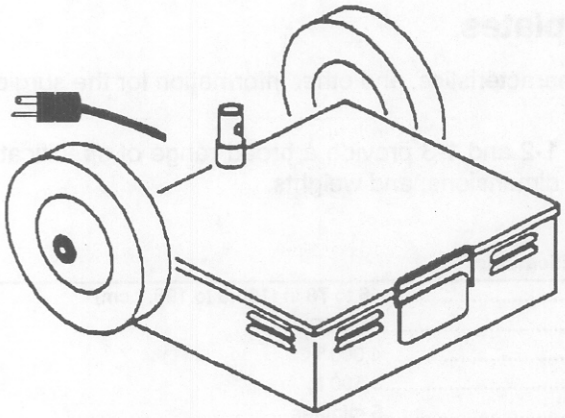

Figure 1-2. Base assembly.

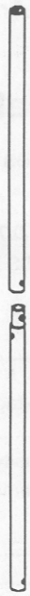

Figure 1-3. Support posts.

c. Arm assembly (fig 1-4). The arm assembly supports the lighthead and provides a range of vertical height for the lighthead as well as 90 degrees of rotational capability.

d. Lighthead (fig 1-5). The lighthead contains the source of light and the optical system of the surgical light. A tungsten-halogen lamp provides 3,500 foot-candles of illumination at the center of the spot, 36 inches from the lower rim of the lighthead, when the lighthead is in a horizontal position. The color correction of the illumination is achieved by a blue-green colored heat filter surrounding the light source and by the dichroic-coated reflector. Heat is dissipated through the reflector and is also absorbed by the glass filter. A frosted lens diffuses the light beam. The lighthead includes an electrical power switch, an integral handle, and a handle which can be removed and sterilized.

NOTE

The lighthead and arm assembly normally remain fastened together.

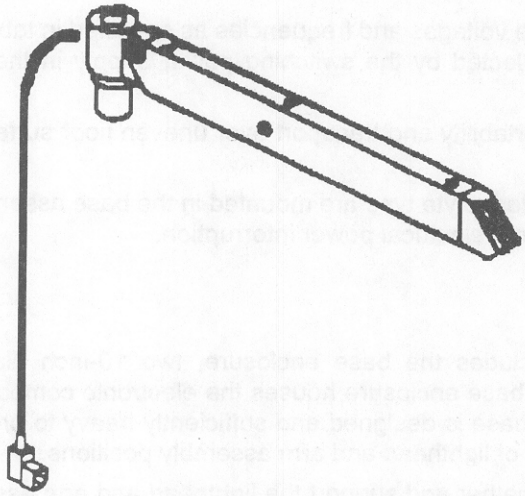

Figure 1-4. Arm assembly.

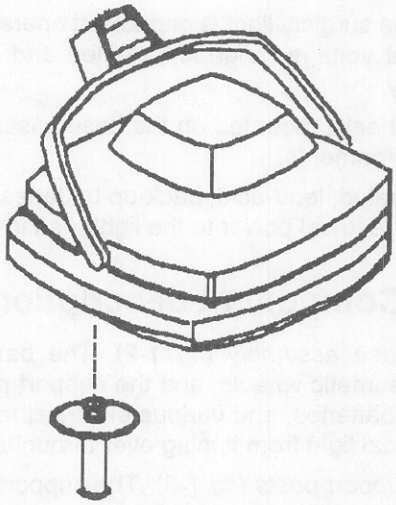

Figure 1-5. Lighthead.

1-13. Tabulated data, decals, and data plates.

The tabulated data provides the specifications, physical characteristics, and other information for the surgical light.

a. Specifications and physical characteristics. Tables 1-2 and 1-3 provide a broad range of specifications and physical characteristics to include operating voltages, dimensions, and weights.

Table 1-2. Specifications.

Lighthead vertical range	46 to 78 in (116.8 to 198.1 cm)
Battery cut-off voltage	21 VDC
Color correction	4,000 °K
Foot-candle intensity	3,500 fc
Assembly/disassembly	5 minutes
Optical system	
Heat filter	Blue-green, color correcting
Reflector	Dichroic-coated, color correcting
Lens	Frosted diffusion type

Table 1-3. Physical characteristics.

Operating voltage ranges	95 to 135 VAC, 50/60 Hz or 190 to 270 VAC, 50/60 Hz or 21 to 24 VDC
Operating amperages	2.5 A @ 115 VAC or 1.25 A @ 230 VAC
Weight	
Surgical light	92 lbs (41.8 kg)
Batteries	27.4 lbs (12.44 kg)
Storing/shipping chest	53 lbs (24.1 kg)
Tungsten-halogen lamp	
Voltage	24 VDC
Wattage	60 W
Average life	500 hrs
Base	Bayonet
Storing/shipping chest dimensions (approximate)	
Width	37 in (94.0 cm)
Height	12.5 in (31.8 cm)
Depth	27 in (68.6 cm)
Wheel diameter	10 in (25.4 cm)
Lens area	103 in^2 (664.5 cm^2)
Reflector diameter	10.5 in (26.7 cm)

b. Identification, instruction, and warning plates, decals, or markings.

(1) A manufacturer data plate, located on the back of the base assembly, is depicted in figure 1-6. Three contracts were awarded for the surgical light. The contract number on the label should be one of the following: DLA 120-91-C-8529, DLA 120-92-C-8523, or DLA 120-91-W-P091. The national stock number (NSN) is incorrect on the units. The correct NSN is 6530-01-**343-2033**.

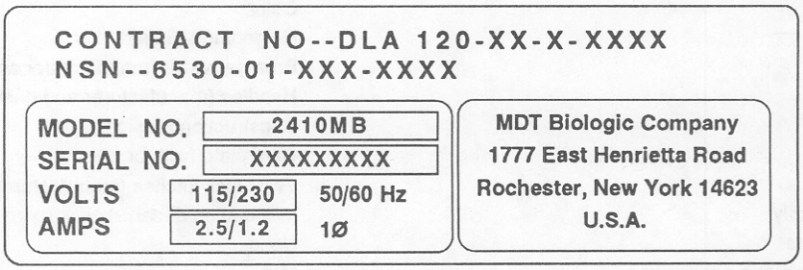

Figure 1-6. Manufacturer data plate.

(2) A representative breather valve and instruction decal, located on the long side of the chest, is depicted in figure 1-7.

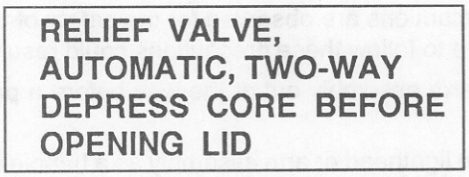

Figure 1-7. Breather valve instruction decal.

(3) A decal explaining an explosion hazard in English and French languages, located on the underside of the arm assembly near the mount, is depicted in figure 1-8.

DANGER - EXPLOSION HAZARD, DO NOT USE IN THE PRESENCE OF FLAMMABLE ANESTHETICS.

Figure 1-8. Explosion hazard decal.

(4) A warning plate in English and French languages, located on the heat shield baffle disk of the lighthead, is depicted in figure 1-9.

(5) A decal, located on the base assembly cover plate, depicts the chest and surgical light as illustrated in figure 3-1 and assembling procedures as illustrated in figures 3-2 through 3-8.

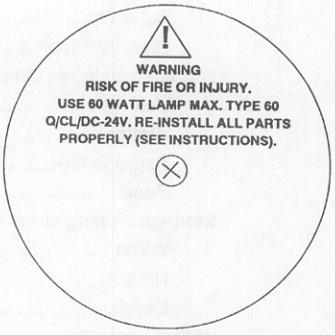

Figure 1-9. Warning plate.

1-14. Model differences or manufacturing variations.

a. Model differences are not applicable since this manual covers a single model.

b. Manufacturing variations are identified in table 1-4.

Table 1-4. Manufacturing variations.

Assembly/component	*Variations*
Chest	Color
	Hinged/non-hinged
	Breather valve (manufacturer and location)
	Handles (manufacturer and design)
	Construction (design)
	Data plate (with or without)
	Twist-lock latches (manufacturer)
Base assembly	Information decal
Support posts	None
Lighthead and arm assembly	None

c. Design changes and manufacturing variations in assemblies, subassemblies, or components will occur periodically. Information on such changes will be published in supply bulletins and revisions to this manual.

1-15. Safety, care, and handling.

a. Observe each **WARNING**, **CAUTION**, and **NOTE** in this manual.

b. Ensure that the following precautions are observed for the safety of the patient and operating personnel when using the surgical light. Failure to follow these precautions could result in injury to the patient and user.

(1) Move the lighthead and arm assembly out of the way before a patient is allowed to get up from the examination or treatment table.

(2) Do not let a patient use the lighthead or arm assembly as a handle or for support to get up from a table.

(3) Use close supervision when the surgical light is used on or near children.

(4) Do not touch hot surfaces. Use the handles.

(5) Turn off the surgical light when it is not in use.

(6) Do not operate the surgical light if it has been damaged or is malfunctioning.

(7) Use the surgical light only for its intended purpose.

(8) Do not run variable height tables, track-mounted x-ray systems, or other equipment into the lighthead or arm assembly.

(9) Do not expose the base assembly to standing water or liquids.

(10) Move the surgical light in a careful manner.

Section III. PRINCIPLES OF OPERATION

1-16. Basic operation.

a. The basic operation of the surgical light involves the conversion of electrical energy to electromagnetic radiation that includes infrared, visible, and ultraviolet wavelengths. The unwanted infrared and ultraviolet radiation is eliminated by the heat filter, dichroic-coated reflector, and the diffusion lens.

b. The illumination level, measured in foot-candles, is controlled by the linear power supply and the focus of the lamp within the reflector. A room is considered darkened at 1 or 2 foot-candles, but large objects can be detected. Reading or other visual activities require 20 to 200 foot-candles. Surgical procedures, supported by this surgical light, require 3,500 foot-candles.

c. The color quality, a measure of the spectral content of visible radiation expressed as a color temperature in degrees Kelvin (°K), is controlled by the lamp amperage, the heat filter (blue-green glass cylinder), the reflector, and the lens. The surgical light is color corrected to 4,000 °K.

NOTE

Color correction is critical for proper patient diagnosis and treatment because low color temperatures cause objects to appear with a red tint and high color temperatures cause a bluish tint.

d. The optical and mechanical principles used in the construction of the reflector with flutes reduce shadows in the illuminated area.

1-17. Power supplies.

a. Switching power supply, 24 VDC. This switching power supply automatically provides electrical power to the tungsten-halogen lamp when the surgical light is operated from either a 115 VAC or a 230 VAC, 50/60 Hz source.

b. Linear power supply, 28 VDC. This linear power supply charges the two internal batteries whenever the surgical light is connected to external electrical power.

CHAPTER 2

OPERATING INSTRUCTIONS

Section I. SURGICAL LIGHT OPERATION

2-1. Start-up procedures.

Start-up procedures are as follows:

a. Unpack, assemble, and prepare the surgical light for operation by following the steps in chapter 3, section II.

b. Determine the source of electrical power.

(1) If AC electrical power will be used, connect the female, 3-conductor electrical connector of the power cable into the mating connector on the back of the base assembly (fig 2-1) and the male connector into a grounded electrical receptacle.

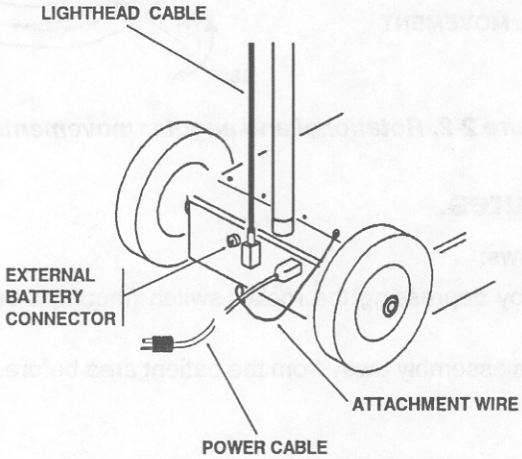

Figure 2-1. Electrical connections.

(2) If an external 24 VDC battery will be used, refer to paragraph 2-12 for operation.

c. Attach a sterile handle by threading it into the lighthead. Tighten it with moderate hand pressure.

d. Complete the "before" operation checks listed in the preventive maintenance checks and services (table 3-1).

e. Position the patient on the examination, treatment, or surgical table.

WARNING

This surgical light is not safe for use in flammable anesthetizing locations.

f. Turn on the surgical light by depressing the rocker switch (mounted on the lighthead yoke) to the "—" symbol.

WARNING

Do not touch hot surfaces of the lighthead. Use the handles to position the lighthead and arm assembly.

g. Select the area to be illuminated using the lighthead and arm assembly movements illustrated in figure 2-2.

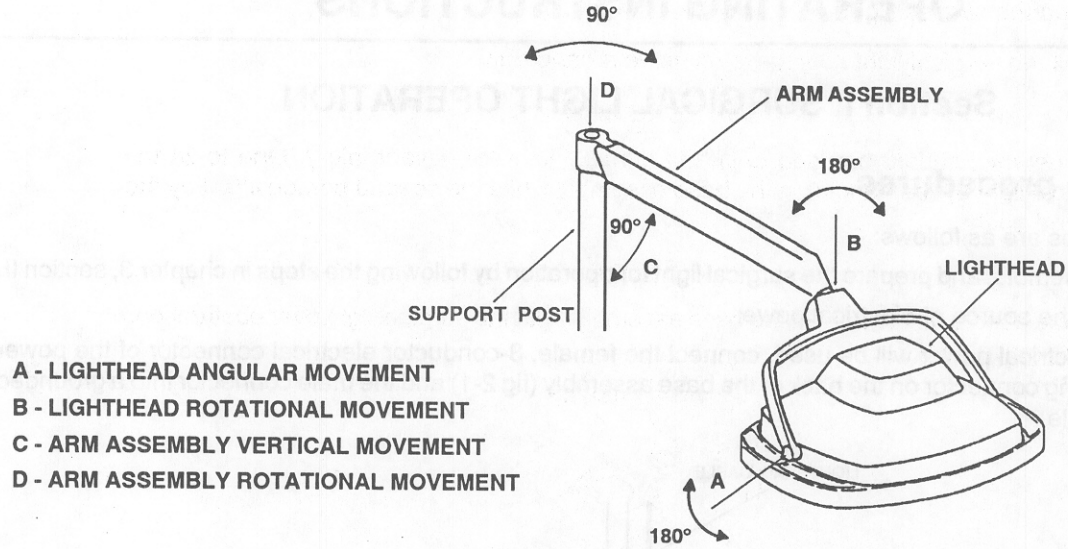

Figure 2-2. Rotational and angular movements.

2-2. Shutdown procedures.

Shutdown procedures are as follows:

a. Turn off the surgical light by depressing the rocker switch (mounted on the lighthead yoke) to the "O" symbol.

b. Move the lighthead and arm assembly away from the patient area before allowing the patient to sit upright or get off the table.

2-3. Electrical power interruption.

The surgical light will momentarily flicker when the internal power supply switches from alternating current (AC) voltages (line power) to internal battery operation when an electrical power interruption occurs.

Section II. OPERATIONAL FACTORS

2-4. Illumination.

A portion of the surgical light's radiant output causes a temperature increase in the illuminated area which may then cause drying of the patient's exposed body area. Even though this effect is minimal, the surgical light should be turned off or directed away from the patient when it is not needed.

2-5. Movements (fig 2-3).

a. Disconnect the power cable.

b. Tip the front of the base assembly off the floor by pulling downward in an arc on the support posts while standing behind the surgical light.

WARNING

To avoid personnel injury or damage to the surgical light, hold the arm assembly when moving the surgical light.

c. Push or pull the surgical light as you would move a hand truck.

CAUTION

Two persons should be used to lift the surgical light to prevent injury. One to lift the surgical light by the handle on the base assembly while the second person lifts it by the support posts.

NOTE

Use the handle on the front of the base assembly to lift the surgical light over obstructions during movement.

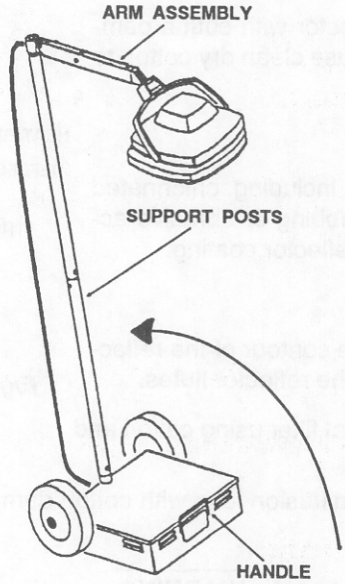

Figure 2-3. Moving the surgical light.

Section III. OPERATION OF AUXILIARY EQUIPMENT

2-6. Examination and treatment tables.

The surgical light is used with a variety of examination, treatment, or surgical tables.

Section IV. CLEANING, DISINFECTING, AND STERILIZING PROCEDURES

2-7. General.

a. The exterior and optical surfaces should be clean at all times. Cleaning of exterior surfaces at regular intervals is encouraged.

b. The water for cleaning should be deionized or distilled.

2-8. Cleaning exterior surfaces.

WARNING

Disconnect electrical power from the surgical light before performing any cleaning procedures to avoid electrical shock. Also, allow the lighthead to cool before touching any internal parts.

a. Wipe all exterior surfaces with a soft cloth dampened with a mild cleaning agent safe for use on polyurethane paint.

b. Dry the exterior surfaces with a lint-free cloth.

2-9. Cleaning/disinfecting optical surfaces (fig 2-4).

a. Loosen the three thumbscrews and allow the diffusion lens to be suspended on its retaining strap.

b. Gently clean the inside of the reflector with cotton dampened with surface disinfectant and then use clean dry cotton to dry it.

CAUTION

Do not use acid solutions, including chlorinated cleaners, and avoid any scrubbing or abrasive action to avoid damage to the reflector coating.

NOTE

The cotton will conform to the contour of the reflector. Clean in the direction of the reflector flutes.

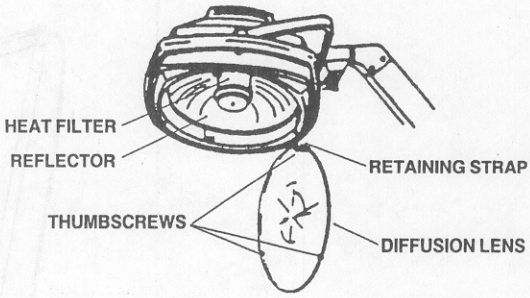

Figure 2-4. Cleaning optical surfaces.

c. Clean and dry the outside of the heat filter using cotton and a surface disinfectant.

d. Gently clean both surfaces of the diffusion lens with cotton dampened with surface disinfectant. Wipe it dry with dry cotton.

WARNING

The heat filter (blue-green glass cylinder) and diffusion lens must be in place before operating the surgical light to prevent ultraviolet and infrared rays from reaching the patient or operator.

NOTE

The diffusion lens has a center fusion spot which must face inward.

e. Reinstall the diffusion lens with the three thumbscrews.

2-10. Sterilizing the removable handle.

a. Remove the handle from the lighthead by turning it counterclockwise.

b. Wash the handle in warm, soapy water and then dry it.

c. Store the handle(s) until needed.

d. Sterilize the handle just before use in accordance with procedures using steam or ethylene oxide.

Section V. OPERATION UNDER UNUSUAL CONDITIONS

2-11. General.

When operating the surgical light under unusual conditions such as dusty environments, a more frequent interval of PMCS may be required.

CAUTION

The surgical light is not suitable for use in a wet environment.

2-12. Operation on vehicle battery power.

Emergency operation of the surgical light is possible by fabricating a two-conductor power cable. The illustration in figure 2-5 displays the electrical receptacle configuration on the base assembly.

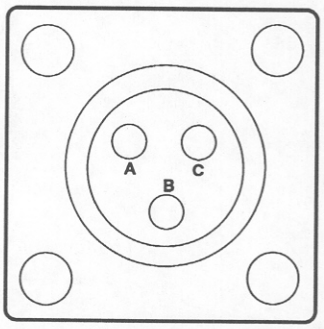

A - 24 VDC(+)
B - 24 VDC (—)
C - NOT USED

Figure 2-5. Electrical receptacle configuration.

CHAPTER 3

UNIT LEVEL MAINTENANCE

Section I. GENERAL INFORMATION

3-1. Overview.

Maintenance functions, both preventive and corrective, that are beyond the scope of the user are assigned to unit level maintenance equipment repairer personnel. These personnel will perform the majority of maintenance required for the equipment except for some tasks involving the printed circuit board (PCB), power supplies, base assembly, and arm assembly. This chapter provides instructions and information to aid in performing the required tasks.

3-2. Tools and test equipment.

Common tools and test equipment required for unit level maintenance of the equipment are listed in appendix B, section III of this manual. Refer to your unit's modified table of organization and equipment (MTOE) for authorized items.

3-3. Components of end item and basic issue items.

Components of end item and basic issue items are listed in appendix C, sections II and III of this manual.

3-4. Expendable supplies.

Expendable and durable supplies and materials required for maintenance of the equipment are listed in appendix D, section II of this manual.

3-5. Repair parts.

Repair parts required for unit level maintenance are listed in appendix E, section II of this manual.

3-6. Special tools.

Special tools required for unit level maintenance of the equipment are listed in appendix E, section III of this manual.

3-7. Additional authorization item.

An additional item required for emergency operation of the surgical light on external 24 VDC electrical power is identified in appendix F, section II of this manual.

Section II. SERVICE UPON RECEIPT OF EQUIPMENT

3-8. Unpacking the surgical light (fig 3-1).

a. Open the cardboard shipping carton and remove the surgical light which is packed in a reusable storing/shipping chest.

b. Unfasten the latches.

c. Open the chest lid.

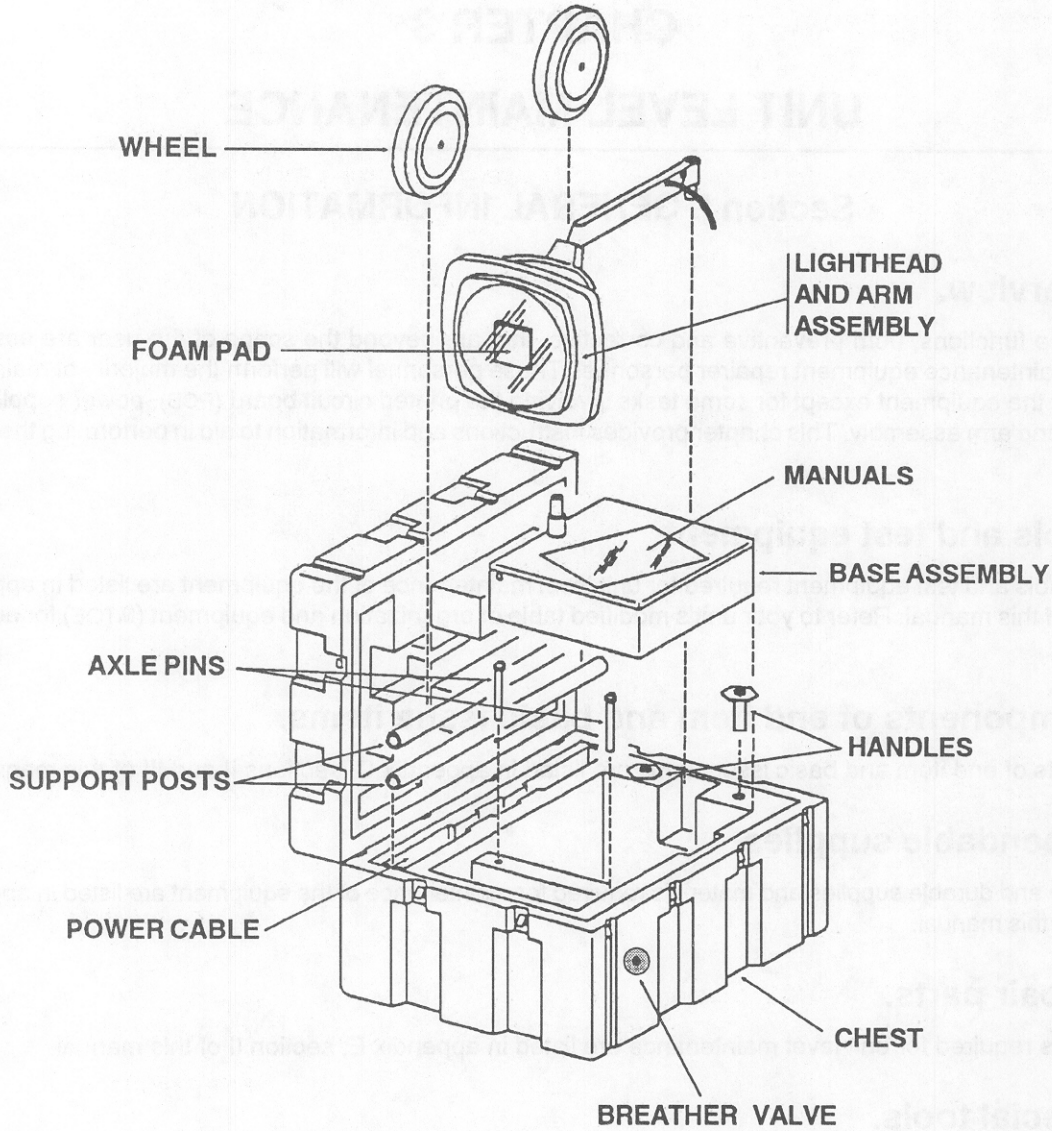

Figure 3-1. Chest and surgical light components.

d. Observe how the components are packed in the molded foam.

e. Inventory and remove the following items. Set them aside.

(1) Lighthead and arm assembly.

(2) Upper support post.

(3) Lower support post.

(4) Base assembly.

(5) Wheels (2) and axle pins (2).

(6) Manuals (2).

(7) Handles (2).

(8) Power cable with green, plastic-coated attachment wire assembly.

f. Close the chest lid, fasten the latches, and set the chest aside.

3-9. Assembling the surgical light.

NOTE

No tools are required to assemble the surgical light.

a. Attach the two wheels to the base assembly by inserting the axle pins through the wheels and into their sockets. Refer to figure 3-2.

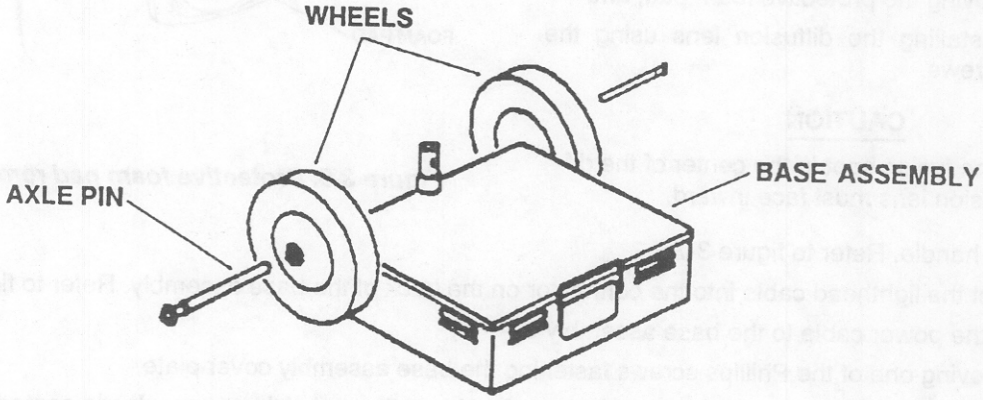

Figure 3-2. Attaching wheels.

b. Push the lower support post downward onto the base assembly post support until it is locked by the spring-loaded button latch. A slight back and forth circular motion may be required to align the button latch and its mating hole. Refer to figure 3-3.

c. Push the upper support post downward onto the lower support post until it is locked by the spring-loaded button latch. A slight back and forth circular motion may be required to align the button latch and its mating hole. Refer to figure 3-4.

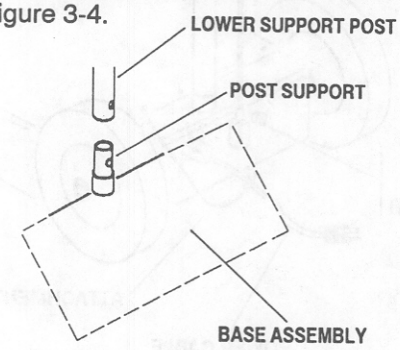

Figure 3-3. Installing lower support post.

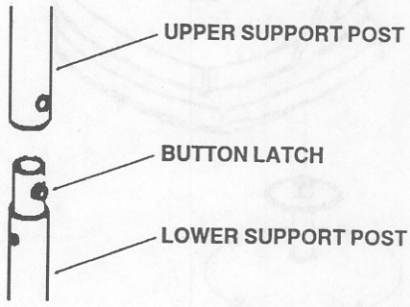

Figure 3-4. Installing upper support post.

d. Insert the lighthead and arm assembly mount into the upper support post. Refer to figure 3-5.

NOTE

The lighthead and arm assembly must be within a 90-degree arc of the base assembly. Otherwise, the upper support post will not allow mounting because of a keyway designed to limit movement.

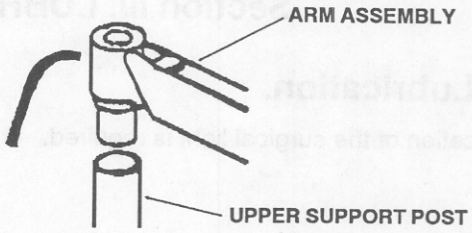

Figure 3-5. Mounting the lighthead and arm assembly.

e. Remove the protective foam pad from the lighthead and arm assembly (figure 3-6) by —

(1) removing the three thumbscrews holding the diffusion lens,

(2) lowering the diffusion lens and letting it hang suspended on its retaining strap,

(3) removing the protective foam pad, and

(4) reinstalling the diffusion lens using the three thumbscrews.

CAUTION

The fusion spot in the center of the diffusion lens must face inward.

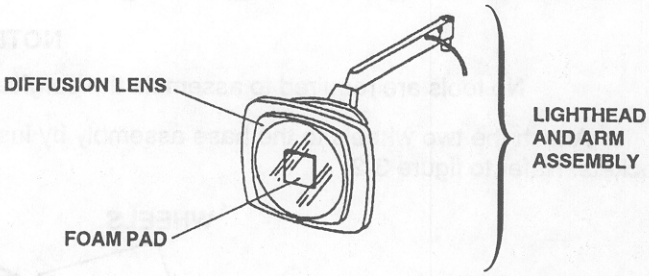

Figure 3-6. Protective foam pad removal.

f. Install a handle. Refer to figure 3-7.

g. Connect the lighthead cable into the connector on the back of the base assembly. Refer to figure 3-8.

h. Attach the power cable to the base assembly by—

(1) removing one of the Phillips screws fastening the base assembly cover plate,

(2) inserting the screw through the electrical terminal lug at the end of the green, plastic-coated attachment wire, and

(3) reinstalling the screw.

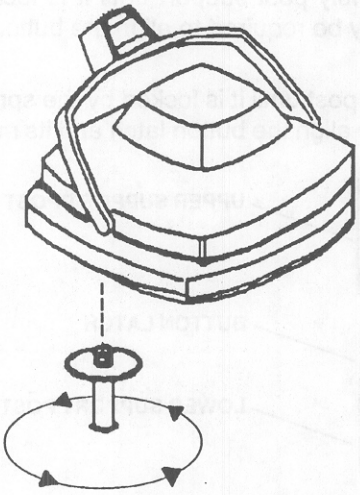

Figure 3-7. Handle.

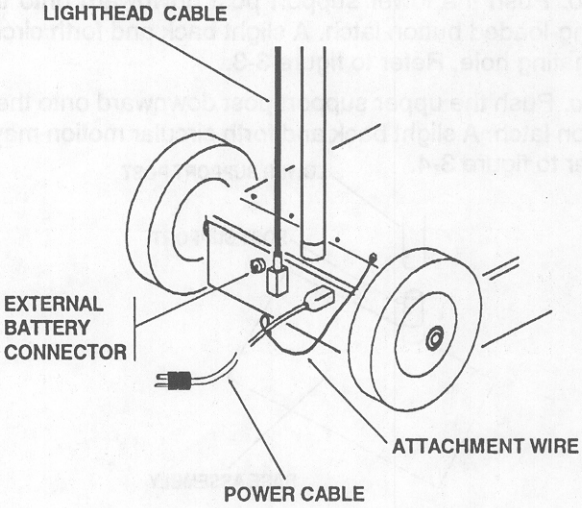

Figure 3-8. Lighthead and power cables.

Section III. LUBRICATION INSTRUCTIONS

3-10. Lubrication.

No lubrication of the surgical light is required.

Section IV. PREVENTIVE MAINTENANCE CHECKS AND SERVICES

3-11. General.

a. The surgical light must be inspected and serviced systematically to ensure that it is ready for operation at all times. Inspection will allow defects to be discovered and corrected before they result in serious damage or failure. Table 3-1 contains a list of PMCS items to be performed by unit level maintenance personnel.

b. Preventive maintenance is not limited to performing the checks and services listed in the PMCS table. There are things you should do any time you see they need to be done, such as checking for general cleanliness, observing for improper operational indicators, and maintaining the proper quantities of operating supplies.

c. The following is a list of the PMCS table column headings with a description of the information found in each column:

(1) *Item No.* This column shows the sequence in which to do the PMCS, and is used to identify the equipment area on the Equipment Inspection and Maintenance Worksheet, DA Form 2404.

(2) *Interval.* This column shows when each PMCS item is to be serviced: **B** - Before Operation, **D** - During Operation, **A** - After Operation, **Q** - Quarterly, and **S** - Semiannually. **B**, **D**, and **A** should be performed with daily use of the equipment.

NOTE

When the surgical light must be kept in continuous operation, check and service only those items that will not disrupt operation. Perform the complete daily checks and services when the equipment can be shut down.

(3) *Item to be Inspected and Procedure.* This column identifies the general area or specific part to be checked or serviced.

(4) *Equipment is not Ready/Available If:.* This column lists conditions that make the equipment unavailable or unusable.

Table 3-1. Preventive maintenance checks and services.

ITEM NO	INTERVAL					ITEM TO BE INSPECTED AND PROCEDURE	EQUIPMENT IS NOT READY/AVAILABLE IF:
	B	D	A	Q	S		
1.				X		**Surgical light.** Ensure that the following components are on hand: Lighthead and arm assembly Upper support post Lower support post Base assembly Wheels (2) and axle pins (2) Manuals (2) Handles (2) Power cable	Missing components prevent operation of the surgical light.
2.					X	**Storing/shipping chest.** *a.* Inspect for cracks, indentations, or puncture holes.	The chest damage prevents protective storage or safe movement.

Table 3-1. Preventive maintenance checks and services - continued.

ITEM NO	INTERVAL					ITEM TO BE INSPECTED AND PROCEDURE	EQUIPMENT IS NOT READY/AVAILABLE IF:
	B	D	A	Q	S		
						b. Check for loose, bent, or broken latches. *c.* Inspect the interior foam insulation and the surgical light components for evidence of moisture after direct exposure to rain or snow.	Unserviceable latches prevent safe movement. An unserviceable lid gasket or crack/puncture allows moisture to cause an electrical hazard.
3.	X	X	X	X		**Base assembly.** *a.* Check the post support mount for physical damage. *b.* Inspect the electrical connectors for wear or damage. *c.* Check the power cable for cuts, fraying, and worn or broken connectors.	Damage to the mount prevents assembly of the support posts. Worn or damaged electrical connectors prevent use of the surgical light. The surgical light cannot be operated on AC electrical power or can be operated but causes an electrical hazard.
4.	X	X	X	X		**Support posts.** Check for proper assembly.	Missing components or physical damage prevents safe assembly of the surgical light.
5.	X	X	X	X		**Lighthead and arm assembly.** *a.* Check the cable for cuts, fraying, and worn or broken connectors. *b.* Ensure that the diffusion lens is on the lighthead. *c.* Check that the heat filter is in place and fastened with three compression springs. *d.* Test for the full range of lighthead and arm assembly movements without excessive drifting after positioning. *e.* Test for lamp operation. *f.* Test the optical performance as follows: (1) The light should produce a circular light pattern at 36 inches below the outer edge of the lens cover. (2) The illumination will be 3,500 foot-candles minimum at the center of the illuminated area.	The surgical light cannot be operated or it can be operated but causes an electrical hazard. The diffusion lens is broken or missing. The heat filter or compression springs are broken or missing. The lighthead or arm assembly movements are not stable after positioning. The lamp is inoperative. The optical performance does not meet test criteria.

3-12. Reporting deficiencies.

If operator personnel discover problems with the equipment during PMCS that they are unable to correct, they must report them. Refer to TB 38-750-2 and report the deficiency using the proper forms. Consult with your unit level medical equipment repairer if you need assistance.

Section V. BATTERY INFORMATION

3-13. Type of battery.

The surgical light uses sealed, maintenance-free, rechargeable, lead-acid batteries of the starved electrolyte type which provides a wide temperature operating range. The batteries do not exhibit memory (reduced capacity) characteristics or vent hydrogen gas.

3-14. Battery care and recharging.

The life of the surgical light batteries depends, to a great extent, on their care. Sealed lead-acid batteries exhibit excellent charge retention characteristics; and, prolonged periods when they are not used will not substantially reduce their operating capability. However, if the surgical light is not used for long periods of time, the batteries should be recharged every other month.

3-15. Charging the batteries (fig 3-9).

Connect the power cable to its base assembly connector and an external source of electrical power. The back-up batteries will recharge automatically. The maximum charging time to fully charged status is 8 hours.

CAUTION

Totally discharged back-up batteries should be recharged immediately to prevent internal chemical deterioration.

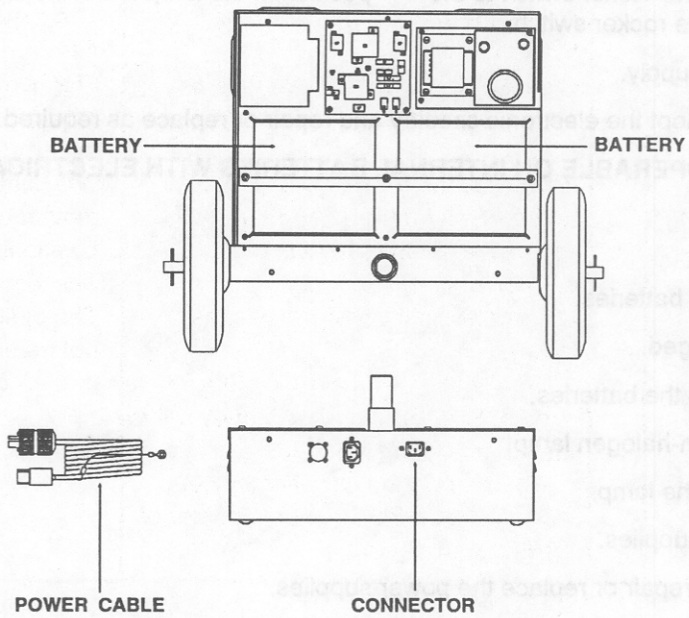

Figure 3-9. Battery charging.

Section VI. TROUBLESHOOTING

3-16. General.

a. General troubleshooting information for locating and correcting many of the operating malfunctions which may develop in the surgical light is located in table 3-2. Symptoms are provided for common malfunctions. Each symptom is followed by possible causes and corrective actions.

b. This manual cannot list all possible malfunctions. If a malfunction is not listed or is not determined by routine diagnostic procedures, notify your appropriate maintenance support unit.

Table 3-2. General troubleshooting.

SYMPTOM	POSSIBLE CAUSE	CORRECTIVE MAINTENANCE
1. SURGICAL LIGHT INOPERABLE ON EXTERNAL ELECTRICAL POWER.		
	Defective fuse.	Replace the fuse.
	Defective tungsten-halogen lamp.	Replace the lamp.
	Defective power cable.	Test and repair cable.
	Lighthead cable disconnected.	Reconnect the cable.
	Lighthead electrical power rocker switch off or defective.	Depress the rocker switch to the "—" position. If the lamp is still inoperable, test and/or replace the rocker switch.
	Defective power supply.	Troubleshoot the electronic circuitry and repair or replace as required.
2. SURGICAL LIGHT INOPERABLE ON INTERNAL BATTERIES WITH ELECTRICAL POWER ROCKER SWITCH ON.		
	Batteries missing.	Install the batteries.
	Batteries not charged.	Recharge the batteries.
	Defective tungsten-halogen lamp.	Replace the lamp.
	Defective power supplies.	Test and repair or replace the power supplies.
	Defective PCB.	Replace PCB.

Table 3-2. General troubleshooting - continued.

3. LOW LIGHT INTENSITY.

Dirty reflector, filter, or diffusion lens.

Clean or replace dirty component(s).

Defective tungsten-halogen lamp.

Replace the lamp.

Defective power supply

Test and repair the power supply.

4. INTERMITTENT ILLUMINATION DURING LIGHTHEAD MOVEMENT.

Loose or broken electrical connection.

Test wiring and electrical connectors for continuity and repair as required.

Loose lamp socket.

Replace the socket.

Defective tungsten-halogen lamp.

Replace the lamp.

5. LAMP FLICKERS.

Power supply has switched to battery operation.

No action as electrical switchover is normal during external electrical power interruptions.

Loose electrical connection.

Test wiring and electrical connectors for continuity and repair as required.

6. LIGHTHEAD DRIFTS.

Movement pivots require adjustment.

Adjust pivot(s).

3-17. Electrical diagrams.

a. An electrical block diagram, the power supply wiring diagram, and a PCB illustration are provided at the end of this chapter in figures 3-54 through 3-56 to assist you when troubleshooting. Isolate your problem to a functional assembly of the surgical light.

b. The electrical components in the lighthead and arm assembly are shown in appendix E, figures E-2, E-3, E-6, and E-7.

Section VII. MECHANICAL ADJUSTMENTS

3-18. General.

a. Mechanical adjustment procedures for drifting of the lighthead or arm assembly (fig 3-10) are provided in this section of the manual.

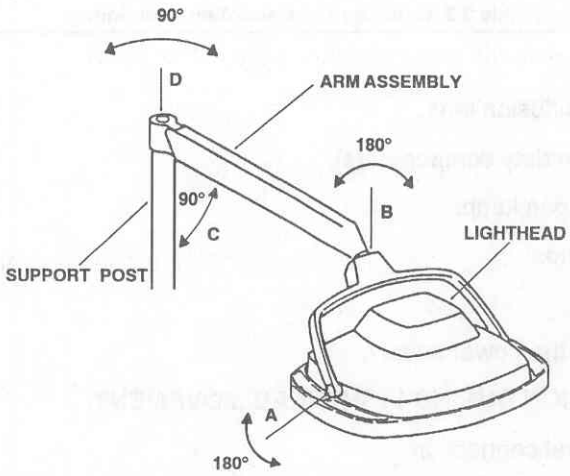

Figure 3-10. Mechanical adjustments.

b. Each movement is divided into check and adjustment steps. Always perform the check step first. If the designated movement does not meet the criteria of the step, then proceed with the adjustment step.

3-19. Lighthead angular drift (adjustment A).

a. Check step.

(1) Turn off the surgical light by depressing the rocker switch (mounted on the lighthead yoke) to the "O" position.

CAUTION

If the surgical light has been in use, allow a 15-minute cooling off period to avoid touching hot surfaces.

(2) Rotate the lighthead up and down about its axis.

(3) Determine if lighthead movement stops when the integral handles are released at any point in the vertical movement.

(4) Go to the necessary adjustment step, if required.

b. Adjustment step.

(1) Remove the lighthead cover (fig 3-11) by removing the four pointed star screws fastening it to the lighthead housing. Set it and the screws aside.

NOTE

Adjustment is made on the right hand pivot (fig 3-12).

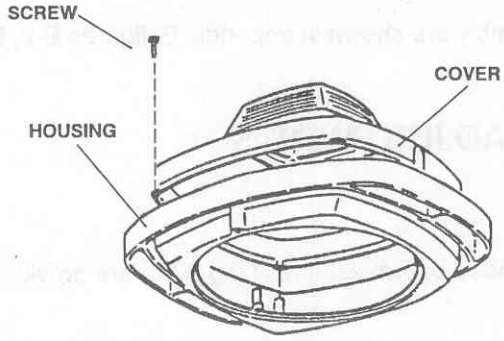

Figure 3-11. Lighthead cover.

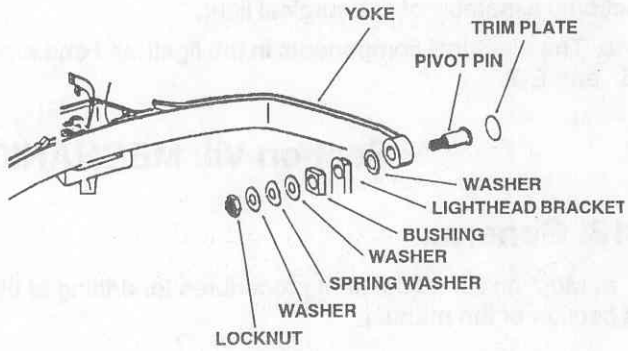

Figure 3-12. Pivot adjustment.

(2) Tighten the locknut slightly.

(3) Recheck for drift and tighten the locknut again slightly, if required.

(4) Reinstall the lighthead cover with the four screws.

3-20. Lighthead rotation drift (adjustment B).

a. Check step.

(1) Turn off the surgical light by depressing the rocker switch (mounted on the lighthead yoke) to the "O" position.

CAUTION

If the surgical light has been in use, allow a 15-minute cooling off period to avoid touching hot surfaces.

(2) Rotate the lighthead around the axis of the arm assembly.

(3) Determine that the lighthead movement stops when the integral handles are released at any point in the yoke rotation.

(4) Go to the necessary adjustment step, if required.

b. Adjustment step.

(1) Remove the four Phillips screws fastening the rocker switch cover (fig 3-13). Remove the cover and set it and the screws aside.

(2) Break the sealing compound bead and loosen the arm assembly set screw.

(3) Break the yoke pin sealing compound bead and loosen it about 1/16 inch using an open-end wrench.

(4) Tighten the yoke pin.

(5) Recheck for drift and tighten the yoke pin slightly more, if required. Do not tighten too much.

(6) Tighten the set screw and reapply a bead of sealing compound.

(7) Reinstall the rocker switch cover with the four Phillips screws.

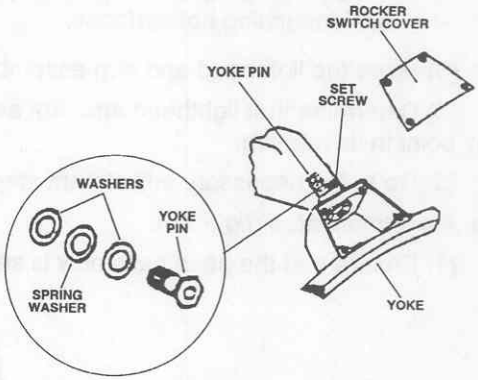

Figure 3-13. Yoke pin adjustment.

3-21. Arm assembly vertical drift (adjustment C).

a. Check step.

(1) Turn off the surgical light by depressing the rocker switch (mounted on the yoke assembly) to the "O" position.

CAUTION

If the surgical light has been in use, allow a 15-minute cooling off period to avoid touching hot surfaces.

(2) Move the arm assembly up and down using the integral handles.

(3) Determine that lighthead and arm assembly movement stops when the integral handles are released at any point in its vertical movement.

(4) Go to the necessary adjustment step, if required.

b. Adjustment step.

(1) Tighten the two friction adjustment screws (fig 3-14) equally.

(2) Recheck for vertical drift and tighten the friction adjustment screws slightly more, if required.

NOTE

If the lighthead and arm assembly still drift after adjustment, refer to paragraph 3-33 to replace the gas spring in the arm assembly.

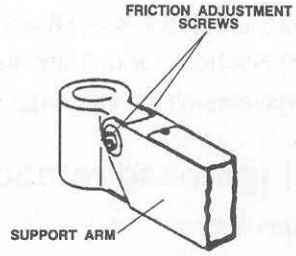

Figure 3-14. Friction adjustment.

3-22. Arm assembly rotational drift (adjustment D).

a. Check step.

(1) Disconnect any external source of electrical power from the surgical light.

(2) Turn off the surgical light by depressing the rocker switch (mounted on the yoke assembly) to the "O" position.

CAUTION

If the surgical light has been in operation, allow a 15-minute cooling off period to avoid touching hot surfaces.

(3) Move the lighthead and arm assembly in its rotational arc using the integral handles.

(4) Determine that lighthead and arm assembly movement stops when the integral handles are released at any point in its rotation.

(5) Go to the necessary adjustment step, if required.

b. Adjustment step (fig 3-15).

(1) Ensure that the base assembly is setting on a flat surface.

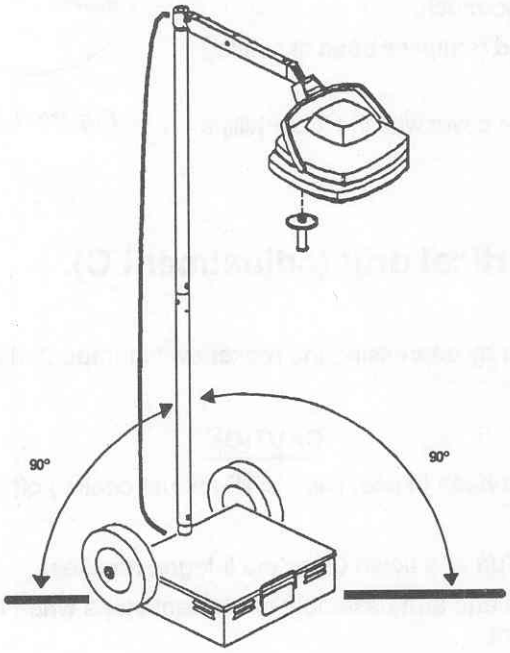

Figure 3-15. Surgical light adjustment.

(2) Check the support posts for tight mounting of the lighthead and arm assembly; a tight fitting of the upper and lower support posts; and a tight fitting onto the base assembly.

(3) Check for vertical alignment of the support posts.

(4) Repair or replace defective components, as required.

Section VIII. CALIBRATION PROCEDURES

3-23. General.

This section of the manual contains the calibration procedures for the two power supplies and the focusing procedures for the tungsten-halogen lamp.

3-24. Electrical power supplies.

WARNING

To avoid electrical shock, use extra caution when making power supply adjustments. Disconnect the power cable before connecting test equipment. Use an insulated adjustment tool to avoid contact with power supply components.

a. Switching power supply (24 VDC).

(1) Disconnect the power cable.

(2) Remove the six Phillips screws fastening the base assembly cover plate.

(3) Remove the cover plate and set it and the screws aside.

(4) Disconnect the lighthead cable.

(5) Connect the positive (+) lead of a voltmeter to jack 2, pin 1 (J2-1) and the negative (-) lead to J2-2 (fig 3-16).

(6) Reconnect the power cable to an external source of AC electrical power.

(7) Adjust the potentiometer (fig 3-17) for +24.67 ±0.01 VDC.

(8) Disconnect the power cable.

(9) Disconnect the voltmeter.

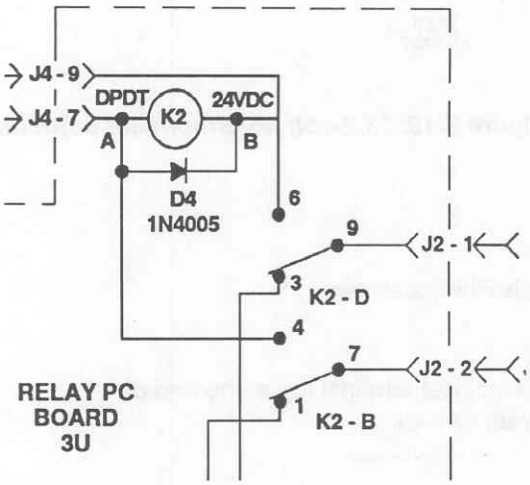

Figure 3-16. Switching power supply.

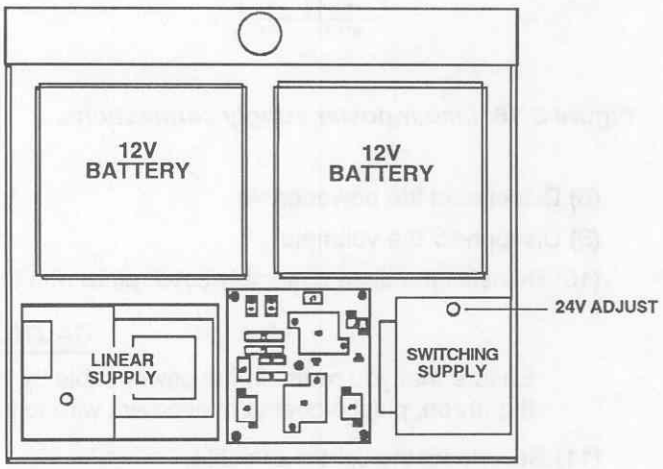

Figure 3-17. 24-volt potentiometer adjustment.

(10) Reinstall the base assembly cover plate with the six Phillips screws.

CAUTION

Ensure that you reattach the power cable by the electrical terminal lug at the end of the green, plastic-coated attachment wire to prevent its loss.

(11) Reconnect the lighthead cable.

b. Linear power supply (28 VDC).

(1) Disconnect the power cable.

(2) Remove the six Phillips screws fastening the base assembly cover plate.

(3) Remove the cover plate and set it and the screws aside.

(4) Disconnect jack 2 (J2).

(5) Connect the positive (+) lead of a voltmeter to J1-1 and the negative (-) lead to J1-4 (fig 3-18).

(6) Reconnect the power cable to an external source of AC electrical power.

(7) Adjust the potentiometer (fig 3-19) for +28.2 ±0.1 VDC (no load condition).

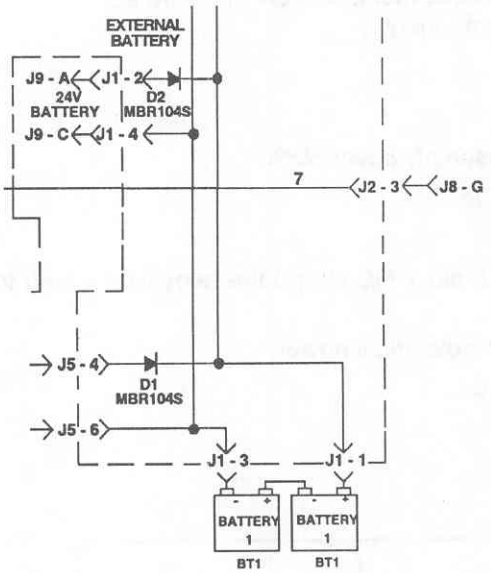

Figure 3-18. Linear power supply connections.

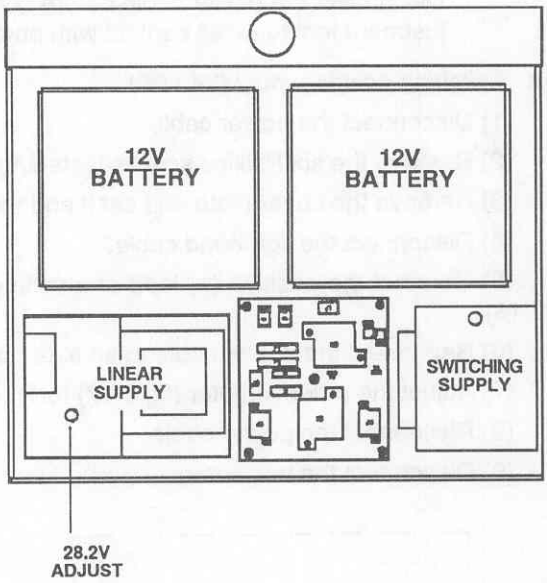

Figure 3-19. 28.2-volt potentiometer adjustment.

(8) Disconnect the power cable.

(9) Disconnect the voltmeter.

(10) Reinstall the base assembly cover plate with the six Phillips screws.

CAUTION

Ensure that you reattach the power cable by the electrical terminal lug at the end of the green, plastic-coated attachment wire to prevent its loss.

(11) Reconnect the lighthead cable.

3-25. Tungsten-halogen lamp.

a. Disconnect the power cable.

b. Turn off the surgical light by depressing the rocker switch (mounted on the lighthead yoke) to the "O" symbol.

CAUTION

If the surgical light has been in use, allow a 15-minute cooling off period to avoid touching hot surfaces.

c. Disconnect the lighthead cable.

d. Remove the lighthead cover (fig 3-20) by removing the four pointed star screws fastening it to the lighthead housing. Set it and the screws aside.

e. Position the lighthead 36 inches from and parallel to a horizontal surface (fig 3-21). Measure the 36 inches from several places on the lower rim of the lighthead.

f. Reconnect the power cable and turn on the surgical light by depressing the rocker switch (mounted on the lighthead yoke) to the "—" position.

g. Set up a foot-candle meter for operation and place the sensor at the center of the illuminated area.

h. Measure and record the illumination.

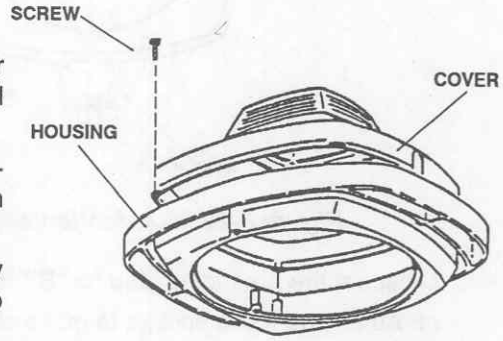

Figure 3-20. Lighthead cover.

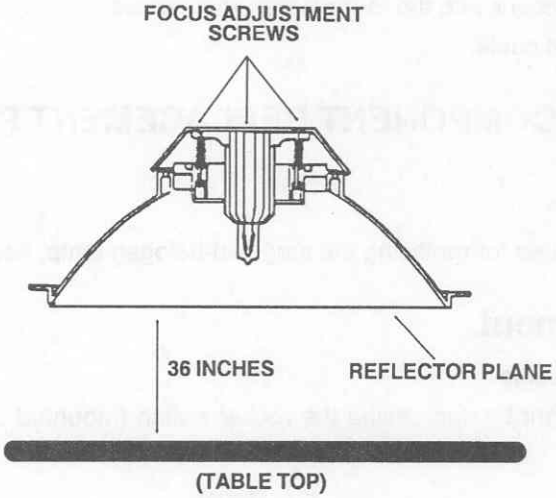

Figure 3-21. Lighthead height adjustment.

i. Adjust the focus screws (fig 3-22) to obtain maximum illumination while keeping a uniform round area.

NOTE

The center of the illuminated area should measure a minimum of 3,500 foot-candles or 37,700 lux. Refer to paragraph 3-27 for lamp replacement procedures if minimum illumination cannot be obtained.

j. Draw an axis pattern as illustrated in figure 3-23.

k. Move the foot-candle meter sensor outward from the center on the "A" axis until you obtain a measurement of 20 percent of the center measurement. Measure and record this radius.

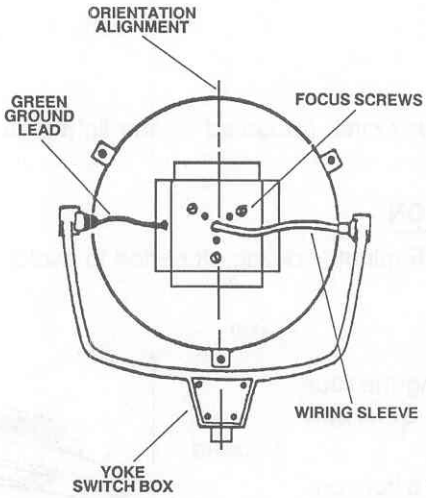

Figure 3-22. Illumination adjustments.

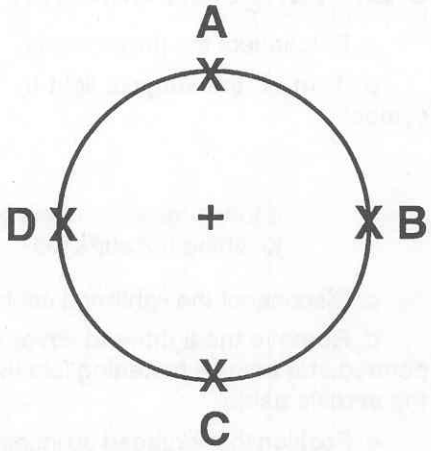

Figure 3-23. Focus measurements.

l. Repeat the preceding step for "B," "C," and "D" axes.

m. Adjust the focus screws to make all four radii of equal length.

n. Shut down the foot-candle meter and remove it.

o. Turn off the surgical light.

p. Disconnect the lighthead cable.

q. Reinstall the lighthead cover with the four pointed star screws.

r. Reconnect the lighthead cable.

Section IX. COMPONENT REPLACEMENT PROCEDURES

3-26. General.

This section contains procedures for replacing the tungsten-halogen lamp, heat filter, and fuses.

3-27. Lamp replacement.

a. Disconnect the power cable.

b. Turn off the surgical light by depressing the rocker switch (mounted on the lighthead yoke) to the "O" symbol.

CAUTION

If the surgical light has been in use, allow a 15-minute cooling off period to avoid touching hot surfaces.

c. Loosen the three thumbscrews fastening the diffusion lens (fig 3-24) and allow the lens to hang from its retaining strap.

d. Position the lighthead a little above your eye level.

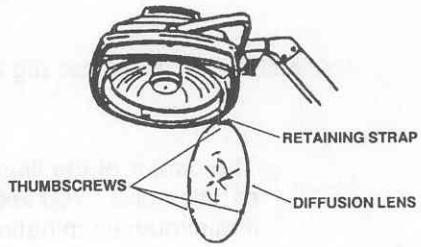

Figure 3-24. Diffusion lens removal/replacement.

e. Grasp the baffle assembly (as illustrated in figure 3-25) with one hand and unhook the three compression springs fastening the heat filter to the lamp socket assembly with your other hand.

CAUTION

Avoid touching the heat filter (blue-green glass cylinder) to prevent skin oils from causing etching of the glass and shortening its useful life. (See fig 3-26.)

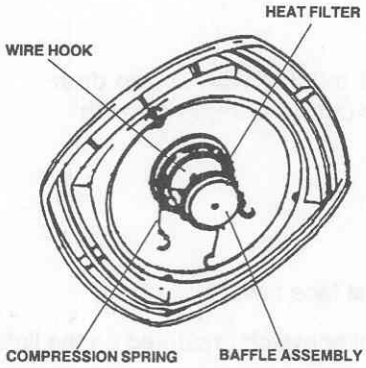

Figure 3-25. Heat filter removal/replacement.

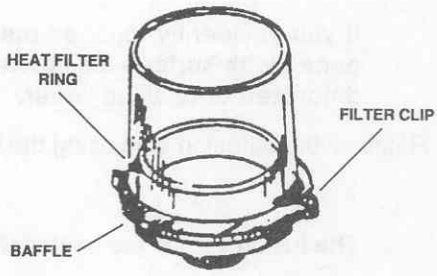

Figure 3-26. Heat filter.

f. Grasp the bayonet-base lamp with a soft cloth covering your finger tips; press upward, and turn the lamp counterclockwise to remove it. Set it aside.

WARNING

The lamp, if crushed or dropped, can rupture with explosive force. Use stringent safety measures to preclude injury to yourself or nearby personnel.

g. Read the safety handling information printed on the wrapper of the replacement lamp.

h. Open the lamp wrapper and expose only the bayonet base (fig 3-27).

i. Hold the lamp wrapper with your finger tips and push the lamp upward into its socket while turning it clockwise.

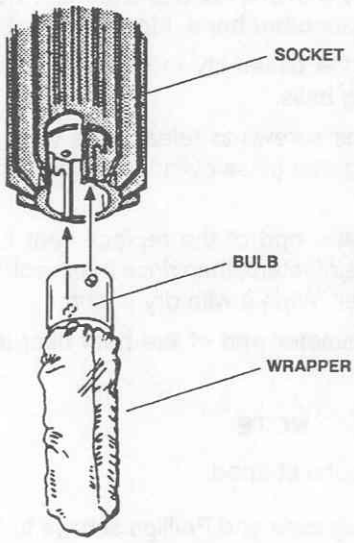

Figure 3-27. Lamp installation.

CAUTION

If you accidently touched the lamp, wipe it using cotton dampened with alcohol or distilled water to prevent skin oils from etching into the glass and causing lamp damage.

j. Reinstall the heat filter by grasping the baffle assembly with one hand and hooking the three compression springs with your other hand to refasten the heat filter to the lamp socket assembly.

CAUTION

If you accidently touched the heat filter, clean the outside with cotton dampened with surface disinfectant, then rinse it with cotton dampened with deionized or distilled water.

k. Reinstall the diffusion lens using the three thumbscrews.

CAUTION

The fusion spot in the center of the diffusion lens must face inward.

l. Test the operation of the surgical light by depressing the rocker switch (mounted on the lighthead yoke) to the "—" symbol.

3-28. Heat filter replacement.

a. Disconnect the power cable.

b. Turn off the surgical light by depressing the rocker switch (mounted on the lighthead yoke) to the "O" symbol.

CAUTION

If the surgical light has been in use, allow a 15-minute cooling off period to avoid touching hot surfaces.

c. Remove the three thumbscrews fastening the diffusion lens and allow the lens to hang from its retaining strap.

d. Position the lighthead a little above your eye level.

e. Hold the baffle assembly with one hand and unhook the three compression springs fastening the heat filter to the socket assembly with your other hand. Move the heat filter to a work surface.

f. Pull outward on the baffle assembly to snap it out of the heat filter ring as it is held in place by four spring-loaded pressure locking balls.

g. Remove the two Phillips screws to release the two retaining clips fastening the heat filter (blue-green glass cylinder) to the baffle assembly. Refer to figure 3-28.

h. Clean the larger diameter end of the replacement heat filter with cotton dampened in surface disinfectant, then rinse it with cotton dampened with deionized or distilled water. Wipe it with dry cotton.

i. Assemble the larger diameter end of the heat filter into the baffle assembly.

NOTE

The heat filter is cone shaped.

j. Reinstall the two retaining clips and Phillips screws to fasten the heat filter to the baffle assembly.

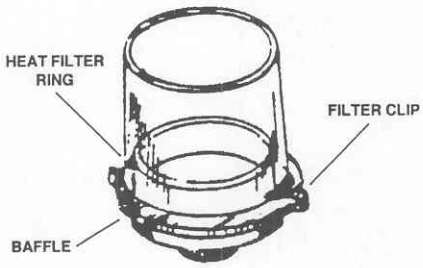

Figure 3-28. Heat filter.

k. Clean the heat filter with cotton dampened with surface disinfectant, then rinse it with cotton dampened with deionized or distilled water.

l. Hold the baffle assembly with one hand and hook the three compression springs with your other hand to fasten the heat filter into the lighthead.

m. Reinstall the diffusion lens using the three thumbscrews.

n. Reconnect the power cable.

o. Test the operation of the surgical light by depressing the rocker switch (mounted on the lighthead yoke) to the "—" symbol.

3-29. Fuse replacement.

a. Disconnect the power cable.

b. Disconnect the lighthead cable.

c. Remove the six Phillips screws fastening the base assembly cover plate.

d. Remove the cover plate and set it and the screws aside.

e. Test the two fuses, identified as "F1" and "F2," located on the relay PCB (fig 3-29), with a multimeter.

f. Replace the defective fuse(s).

g. Reconnect the power and lighthead cables.

h. Test the surgical light by depressing the rocker switch (mounted on the lighthead yoke) to the "—" symbol.

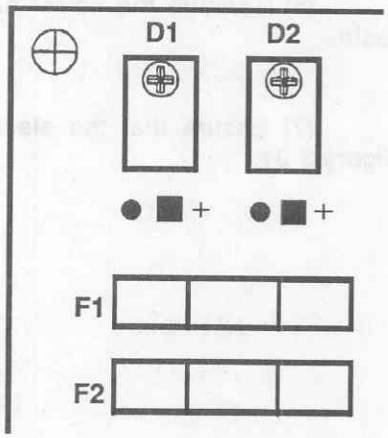

Figure 3-29. Fuses.

i. Turn off the surgical light by depressing the rocker switch to the "O" symbol.

j. Disconnect the power and lighthead cables.

k. Reinstall the base assembly cover plate with the six Phillips screws.

CAUTION

Ensure that you reconnect the green, plastic coated attachment wire on the power cable to prevent its loss.

l. Reconnect the lighthead cable.

Section X. REPAIR PROCEDURES

3-30. General.

a. Procedures for disassembly, replacement of components, testing, and reassembly are provided in this section of the manual.

b. Test procedures are integrated with reassembly, when possible, to preclude total reassembly with a hidden defect and the subsequent repeated disassembly/reassembly actions.

3-31. Rocker switch.

a. Disassembly.

(1) Disconnect the power cable.

(2) Turn off the surgical light by depressing the rocker switch (mounted on the lighthead yoke) to the "O" symbol.

CAUTION

If the surgical light has been in use, allow a 15-minute cooling off period to avoid hot surfaces.

(3) Disconnect the lighthead cable.

(4) Position the lighthead for access to the rocker switch illustrated in figure 3-30.

(5) Remove the four Phillips screws fastening the switch cover.

(6) Remove the cover and set it and the four screws aside.

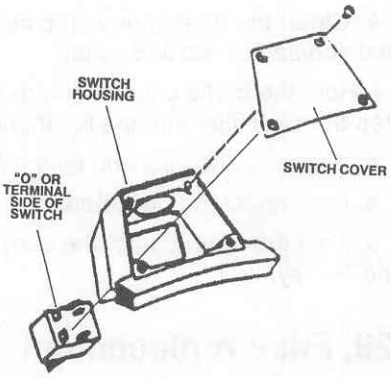

Figure 3-30. Rocker switch.

(7) Ensure that the electrical color-coded wiring and connections match with the illustration in figure 3-31.

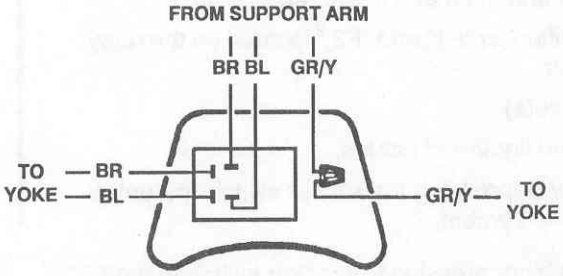

Figure 3-31. Electrical color-coded wiring.

CAUTION

Record color coding variations, if any, to prevent incorrect electrical connections and subsequent damage to the surgical light.

(8) Disconnect the female quick-fit connectors from the rocker switch base terminals.

CAUTION

Ensure that the electrical wires do not retract into the yoke or arm assembly to prevent further disassembly to retrieve the wires.

NOTE

Use needle-nose pliers to grasp the connectors.

(9) Remove the rocker switch from the yoke housing by pressing it outward with your thumb.

b. Reassembly.

(1) Install a new rocker switch by pushing it into the switch housing.

CAUTION

Ensure that the rocker switch is oriented as illustrated above to prevent incorrect assembly.

(2) Reconnect the female quick-fit connectors to the rocker switch base terminals.

(3) Replace the switch cover and refasten it with the four Phillips screws.

(4) Reconnect the lighthead and power cables.

(5) Test the replacement rocker switch by depressing the rocker switch mounted on the lighthead yoke to the "—" symbol.

3-32. Reflector.

a. Disassembly.

(1) Disconnect the power cable.

(2) Turn off the surgical light by depressing the rocker switch (mounted on the lighthead yoke) to the "O" symbol.

(3) Disconnect the lighthead cable.

(4) Position the lighthead for access to the lighthead cover and subsequently the heat sink.

(5) Loosen the three thumbscrews fastening the diffusion lens (fig 3-32) and allow the lens to hang from its retaining strap.

(6) Remove the four pointed star screws fastening the housing cover (fig 3-33).

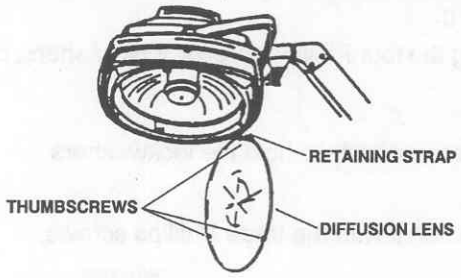

Figure 3-32. Diffusion lens removal/replacement.

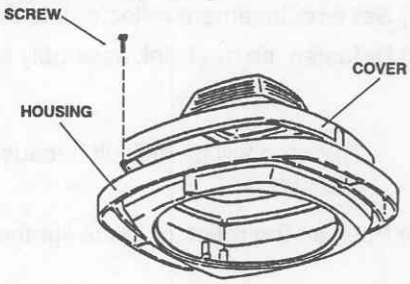

Figure 3-33. Lighthead cover.

(7) Remove the cover and set it and the screws aside.

(8) Remove the green, slotted screw from the heat dissipation plate to loosen the green grounding wire (fig 3-34). Set it aside.

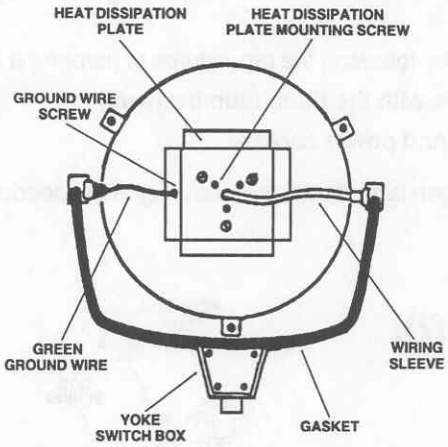

Figure 3-34. Reflector removal.

(9) Remove the three Phillips screws that fasten the reflector to the lighthead housing. Set them aside.

NOTE

The reflector and attached heat sink assembly are now only attached to the lighthead housing by the white wiring sleeve which does not require disassembly.

(10) Remove the four Phillips screws, lockwashers, and nuts to unfasten the reflector from the heat sink assembly (fig 3-35). Lift the reflector from the housing and set it aside.

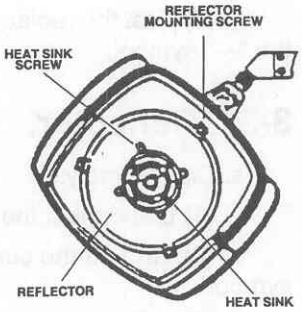

Figure 3-35. Heat sink assembly.

CAUTION

Ensure that the Phillips screws, lockwashers, and nuts are not dropped or lost during this disassembly step to prevent a hardware shortage for reassembly.

NOTE

While the Phillips screws are accessible through the diffusion lens opening, the lockwashers and nuts are located underneath the heat dissipation plate making accessibility difficult.

b. Assembly.

(1) Set a replacement reflector into the lighthead housing.

(2) Refasten the heat sink assembly to the reflector using the four Phillips screws, lockwashers, and nuts.

NOTE

This step will be difficult because of the restricted accessibility to hold the lockwashers and nuts.

(3) Position the reflector in the lighthead housing and fasten it with the three Phillips screws.

CAUTION

Ensure that the yoke, reflector, and heat dissipation plate are aligned as depicted in figure 3-36.

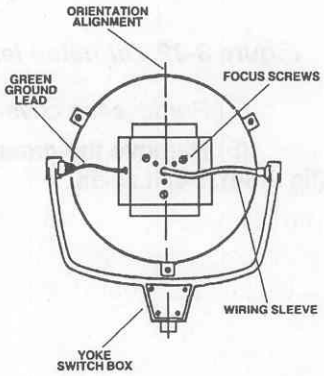

Figure 3-36. Reflector alignment.

(4) Reinstall the green grounding wire by replacing the green, slotted screw.

(5) Reinstall the lighthead cover and fasten it by replacing the four pointed star screws .

(6) Clean the optical surfaces by following the procedures in paragraph 2-10.

(7) Reinstall the diffusion lens with the three thumbscrews.

(8) Reconnect the lighthead and power cables.

(9) Check the tungsten-halogen lamp focus by following the procedures in paragraph 3-25.

3-33. Gas spring (fig 3-37).

a. Disassembly.

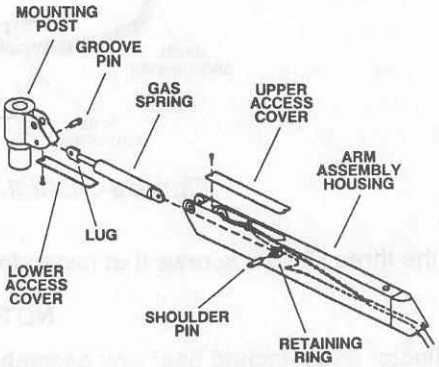

Figure 3-37. Arm assembly.

(1) Disconnect the power cable.

(2) Turn off the surgical light by depressing the rocker switch (mounted on the lighthead yoke) to the "O" symbol.

CAUTION

If the surgical light has been in use, allow a 15-minute cooling off period to avoid touching hot surfaces.

(3) Disconnect the lighthead cable.

(4) Remove the two Phillips screws fastening the metal upper access cover on the arm assembly.

(5) Remove the cover and set it and the two screws aside.

(6) Remove the single Phillips screw fastening the plastic lower access cover on the arm assembly.

(7) Pull the cover out of the arm housing and set it and the screw aside.

(8) Remove the retaining ring from the ¼-inch shoulder pin holding the gas spring in place.

NOTE

The retaining ring is accessible through the upper access opening using retaining ring pliers with a 90-degree offset.

(9) Push the gas spring shoulder pin through the arm assembly housing, using a drift pin punch tool, while simultaneously wiggling the arm assembly upward to release the pin. Set it aside with the retaining ring.

(10) Pull out the drift pin tool.

NOTE

The end of the gas spring will move upward into the upper access area when the retaining pin and drift pin punch tool are removed.

(11) Move the electrical wires to the side and then under the gas spring.

(12) Guide the gas spring through the upper access opening with one hand while the arm assembly is slowly lowered with your other hand.

(13) Drive the groove pin, located near the mounting post, out of the arm assembly using a hammer and drift pin punch tool. Set it aside.

NOTE

The groove pin is tapered and will be punched out from the smaller end.

(14) Remove the defective gas spring (fig 3-37).

b. Reassembly.

(1) Install a replacement gas spring into the upper access opening with the moveable rod end lug oriented vertically and toward the arm assembly mount.

(2) Push the smaller end of the groove pin through the larger groove pin opening side of the arm assembly housing, through the rod end groove pin opening, underneath the electrical wiring, and then through the other side of the arm assembly housing. Then drive the groove pin flush with the sides of the arm assembly housing.

CAUTION

The flutes on the groove pin should be rotated from their original orientation to ensure a tight grip and to prevent possible groove pin loss with potentially hazardous lighthead and arm assembly motion.

(3) Raise the arm assembly housing slowly with one hand while guiding the gas spring into place with the other hand and simultaneously guiding the electrical wires over the gas spring.

CAUTION

The electrical wires will be routed above the gas spring and shoulder pin to prevent the motion of the spring from cutting the wires and causing an electrical safety hazard or damage to the surgical light.

(4) Push the shoulder pin through one side of the arm assembly housing, through the gas spring, and then through the other side of the arm assembly housing.

(5) Position the shoulder pin so that the retaining ring groove is visible inside the upper access opening.

(6) Replace the retaining ring.

(7) Push the end of the plastic lower access cover into the lower access opening until the screw opening is aligned with the screw hole.

(8) Reinstall the single Phillips screw.

(9) Reinstall the upper access cover plate and fasten it with the two Phillips screws.

(10) Test the arm assembly vertical drift by following the check step in paragraph 3-21.

3-34. Yoke assembly.

a. Disassembly.

(1) Disconnect the power cable.

(2) Turn off the surgical light by depressing the rocker switch (mounted on the lighthead yoke) to the "O" symbol.

(3) Disconnect the lighthead cable.

CAUTION

If the surgical light has been in use, allow a 15-minute cooling off period to avoid touching hot surfaces.

(4) Position the lighthead for access to the rocker switch cover.

(5) Remove the four Phillips screws fastening the rocker switch cover (fig 3-38).

(6) Remove the cover and set it and the four screws aside.

(7) Ensure that the electrical, color-coded wiring and connections match with the illustration in figure 3-39.

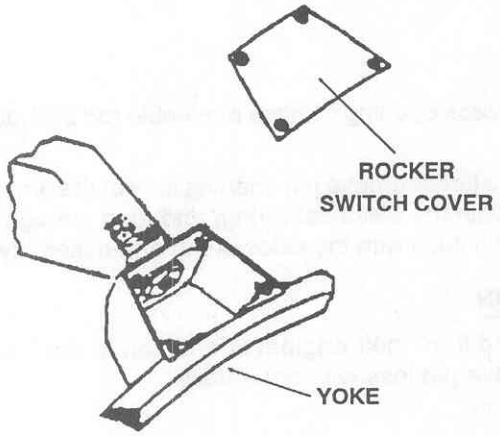

Figure 3-38. Rocker switch.

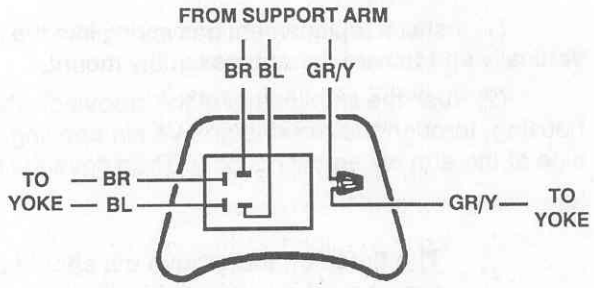

Figure 3-39. Electrical color-coded wiring.

CAUTION

Record color coding variations, if any, to prevent incorrect electrical connections and subsequent damage to the surgical light.

(8) Disconnect the female quick-fit connectors from their rocker switch base terminals.

CAUTION

Ensure that the electrical wires do not retract into the yoke or arm assembly to prevent further disassembly to retrieve the wires.

NOTE

Use needle-nose pliers to grasp the connectors.

(9) Break the sealing compound bead and loosen the set screw.

(10) Remove the yoke pin, two plain washers, and one spring washer.

(11) Separate the yoke from the arm assembly.

CAUTION

The support arm will spring upward when the lighthead is removed.

NOTE

The electrical wires are still interconnecting the lighthead and arm assembly.

(12) Grasp the green electrical wires and remove the insulating wire nut to release the green wire running to the arm assembly. Replace the wire nut on the remaining green wire.

(13) Grasp the blue wire running to the arm assembly and cut off the female quick-fit connector.

(14) Grasp the brown wire running to the arm assembly and cut off the female quick-fit connector.

(15) Pull the three wires (green, blue, and brown) from the yoke.

(16) Perform the required maintenance action.

b. Assembly.

(1) Insert the three wires (green, brown, and blue) into the yoke and then through the yoke pin and washers.

(2) Install a new female quick-fit connector onto the blue wire.

(3) Install a new female quick-fit connector onto the brown wire.

(4) Ensure that the yoke rotation stop is in place.

CAUTION

Ensure that the spring washer is installed between the two plain washers as depicted in the enlargement circle in figure 3-40. This will allow proper yoke rotation.

(5) Push the yoke and arm assembly together and install the yoke pin.

(6) Check the lighthead for rotation drift by following the check step in paragraph 3-20a.

(7) Tighten the yoke pin and repeat the check step as required.

(8) Tighten the set screw.

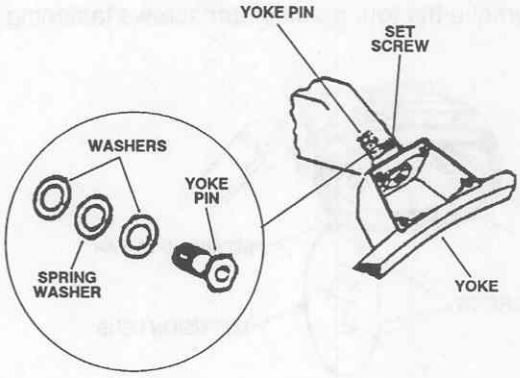

Figure 3-40. Washer assembly.

(9) Reapply a sealing compound bead to the set screw and yoke pin.

(10) Reconnect the female quick-fit connectors to the rocker switch.

CAUTION

Ensure that the electrical, color-coded wiring and connections match with the illustration shown in figure 3-39.

(11) Reinstall the switch cover with the four Phillips screws.

3-35. Lamp contacts.

a. Disassembly.

(1) Disconnect the power cable.

(2) Turn off the surgical light by depressing the rocker switch (mounted on the lighthead yoke) to the "O" symbol.

(3) Disconnect the lighthead cable.

CAUTION

If the surgical light has been in use, allow a 15-minute cooling off period to avoid touching hot surfaces.

(4) Remove the lighthead and arm assembly from the support post by grasping both the lighthead and the arm and then rotating the mount back and forth while exerting upward pressure.

NOTE

The lighthead and arm assembly must be positioned over the base assembly to allow the keyway limit pin upward movement.

(5) Place the lighthead and arm assembly on a work surface.

CAUTION

Rest the lighthead and arm assembly on a soft cloth with the diffusion lens upward to prevent marring it.

(6) Loosen the three thumbscrews fastening the diffusion lens and allow the lens to swing outward on its retaining strap.

(7) Remove the heat filter as illustrated in figure 3-41 and set it aside.

(8) Remove the lamp and set it aside.

(9) Refasten the diffusion lens and turn the lighthead and arm assembly over with the lighthead housing cover upward.

(10) Remove the four pointed star screws fastening the lighthead cover (fig 3-42).

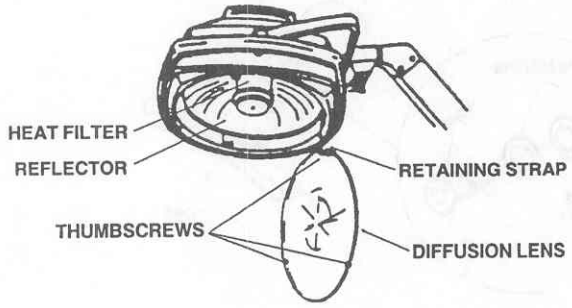

Figure 3-41. Heat filter removal.

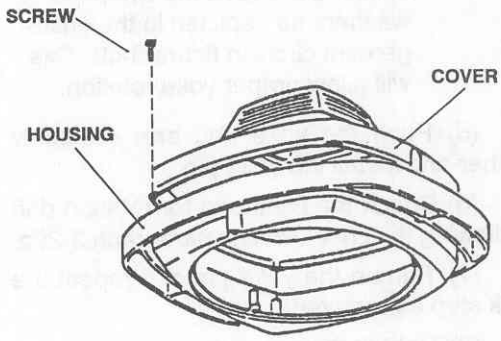

Figure 3-42. Lighthead cover.

(11) Remove the cover and set it and the four screws aside.

(12) Remove the green, slotted screw from the heat dissipation plate to loosen the green grounding wire. Set the screw aside.

(13) Remove the Phillips screw fastening the cable clamp and wiring sleeve to the heat dissipation plate. Set the screw aside.

(14) Remove the four Phillips screws fastening the rocker switch cover.

(15) Remove the cover and set it and the four screws aside (fig 3-43).

(16) Ensure that the electrical, color-coded wiring and connectors match with the illustration in figure 3-44.

CAUTION

Record color coding variations, if any, to prevent incorrect electrical connections and subsequent damage to the surgical light.

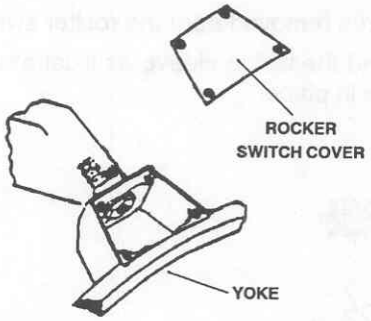

Figure 3-43. Rocker switch.

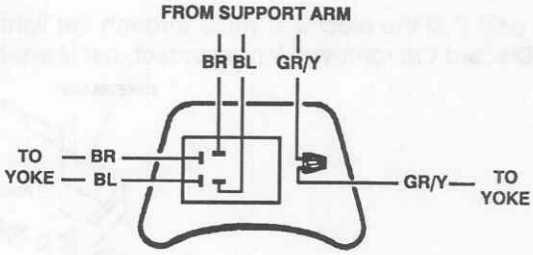

Figure 3-44. Electrical color-coded wiring.

(17) Disconnect the female quick-fit connectors from their rocker switch base terminals.

CAUTION

Ensure that the electrical wires do not retract into the yoke or arm assembly to prevent further disassembly to retrieve the wires.

NOTE

Use needle-nose pliers to grasp the connectors.

(18) Grasp the green electrical wires and remove the insulating wire nut to release the green wire routed into the yoke. Replace the wire nut onto the remaining green wire routed from the arm assembly.

(19) Grasp the blue and brown wires and cut off the female quick-fit connectors.

(20) Lift the yoke gasket illustrated in figure 3-45. Set it aside.

CAUTION

Remove the gasket with a minimum of tension to prevent tearing the gasket.

(21) Pull the wires out of the yoke.

(22) Remove the three Phillips screws fastening the heat dissipation plate. Set them aside.

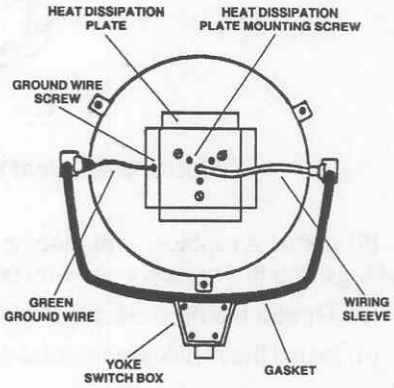

Figure 3-45. Yoke gasket.

(23) Move the heat dissipation plate along the wiring sleeve to expose the electrical contact retaining ring illustrated in figure 3-46.

CAUTION

Do not move or adjust the focus screws to prevent unnecessary lamp focus calibration.

(24) Insert a small screwdriver between the external teeth of the electrical contact retaining ring to pry it loose from the finned heat sink.

NOTE

The electrical contact retaining ring will be damaged and replacement is required.

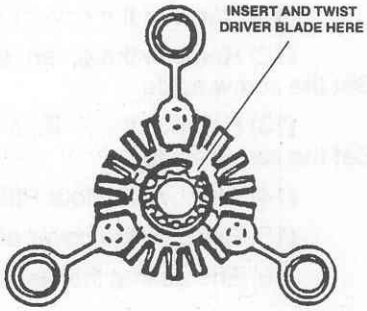

Figure 3-46. Electrical contact retaining ring.

(25) Attach a strong, flexible threading wire to the electrical wires removed from the rocker switch.

(26) Pull the electrical wires through the lighthead pivot pin and the wiring sleeve as illustrated in figure 3-47. Discard the removed lamp contact, but leave the threading wire in place.

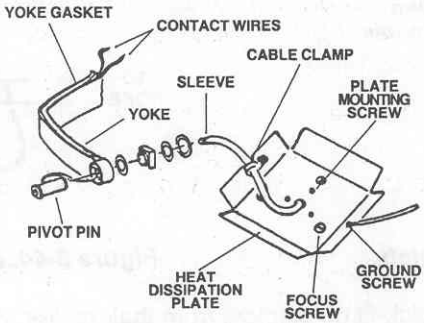

Figure 3-47. Yoke disassembly/assembly.

b. Assembly.

(1) Observe that the finned heat sink casting has four internal slots to ensure the correct lamp contact orientation for the next step (fig 3-48).

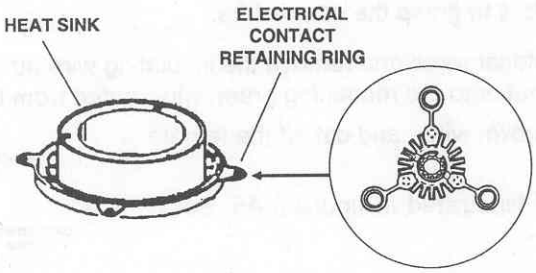

Figure 3-48. Heat sink casting and electrical contact retaining ring.

(2) Install a replacement electrical contact retaining ring into the finned heat sink casting by guiding the socket lugs into the narrow slots with 90-degree separations.

(3) Thread the new electrical wires through the replacement retaining ring and contact spring.

(4) Install the replacement retaining ring and contact spring by pushing it into place using a flat screwdriver blade.

NOTE

Seat the retaining ring against the bottom of the heat sink casting.

(5) Temporarily replace the lamp to check for—

(a) spring tension on the contact,

(b) orientation of contacts, and

(c) overall alignment prior to further reassembly.

(6) Fasten the electrical wires to the threading wire and pull the electrical wires through the wiring sleeve and the lighthead pivot. Detach and discard the threading wire.

(7) Move the heat dissipation plate along the wiring sleeve and position it correctly.

(8) Reinstall the three Phillips screws to fasten the heat dissipation plate.

(9) Insert the electrical wires into the yoke.

(10) Press the yoke gasket into place (fig 3-49).

CAUTION

Seat the yoke gasket evenly by pressing on the gasket with your fingers and then moving your fingers back and forth several times to prevent uneven installation.

(11) Replace the female quick-fit connectors on the blue and brown wires.

(12) Unthread the electrical wire nut left on the green wire, twist the two green wire tips together, and then fasten the two green wires together with the wire nut.

(13) Reconnect the female quick-fit connectors onto the rocker switch.

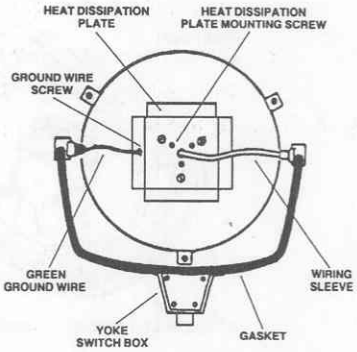

Figure 3-49. Yoke gasket.

CAUTION

Ensure that the wiring matches with the illustration in figure 3-44.

(14) Reinstall the rocker switch cover and fasten it with the four Phillips screws (fig 3-50).

(15) Reinstall the cable clamp and wiring sleeve by replacing the Phillips screw.

(16) Reinstall the green grounding wire by fastening it with the green, slotted screw.

(17) Reinstall the lighthead cover and fasten it by replacing the four pointed star screws (fig 3-51).

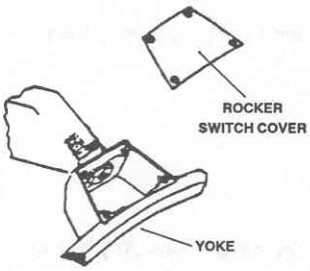

Figure 3-50. Rocker switch.

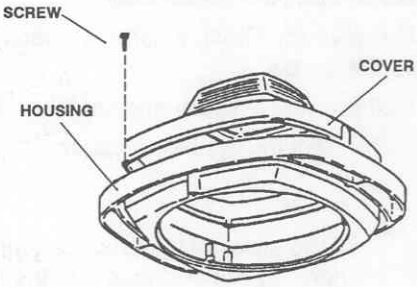

Figure 3-51. Lighthead cover.

(18) Turn the lighthead and arm assembly over and open the diffusion lens.

(19) Clean the lamp by following the procedures in paragraph 2-10 and then install it. Hold the lamp with a cloth covering your finger tips, insert it into the bayonet socket with upward pressure and then turn it clockwise.

CAUTION

If you accidently touched the lamp with your bare fingers, wipe it using cotton dampened with alcohol or distilled water to prevent damage to the lamp from skin oils.

(20) Reinstall the heat filter by grasping it as illustrated in figure 3-52 and hooking the three compression springs.

(21) Clean the heat filter by following the procedures in paragraph 2-10.

(22) Reinstall the diffusion lens using the three thumbscrews (fig 3-53).

(23) Test the operation of the surgical light by depressing the rocker switch (mounted on the lighthead yoke) to the "—" symbol.

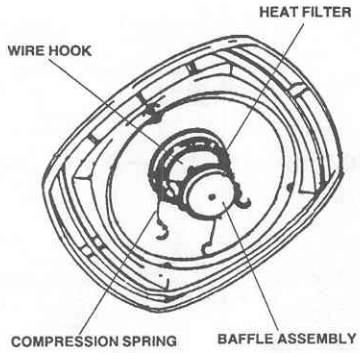

Figure 3-52. Heat filter installation.

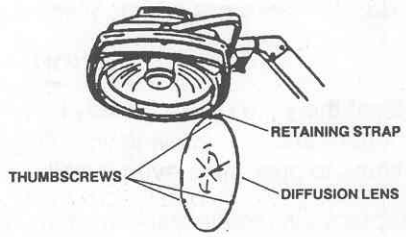

Figure 3-53. Diffusion lens removal/replacement.

Section XI. STORAGE AND SHIPMENT PROCEDURES

3-36. Preparation for storage.

a. Ensure that the back-up batteries are fully charged or refer to paragraph 3-15 for battery charging procedures and timeframes.

b. Ensure that the surgical light is clean or refer to chapter 2, section IV for cleaning, disinfecting, and sterilizing procedures.

c. Disconnect the power cable.

d. Remove the Phillips screw fastening the green, plastic-coated attachment wire to the base assembly. Replace the screw.

e. Coil the power cable and set it aside.

f. Disconnect the lighthead cable.

CAUTION

If the surgical light has been in use, allow a 15-minute cooling off period to avoid packing hot surfaces into the foam chest insert.

g. Insert the foam pad behind the diffusion lens.

h. Remove the lighthead and arm assembly from the support post by grasping both the lighthead and the arm and then rotating the mount back and forth while exerting upward pressure. Set it aside.

CAUTION

The support arm will spring upward when the lighthead and arm assembly is removed from the support post.

NOTE

The lighthead and arm assembly must be positioned over the base assembly to allow the keyway limit pin upward movement.

i. Remove the upper support post from the lower support post by grasping each post while simultaneously depressing the spring-loaded button latch with a finger. Place the post into its position in the chest.

NOTE

Refer to figure 3-1 to repack the surgical light components.

j. Remove the lower support post from the base assembly by grasping it with one hand while depressing the spring-loaded button latch with a finger of the other hand. Place the post into its position in the chest.

k. Remove the two axle pins fastening the wheels to the base assembly. Place the axle pins and the wheels into their positions in the chest.

l. Place the base assembly into the chest.

m. Place the manuals into the chest.

n. Place the lighthead and arm assembly into the chest.

o. Close the chest lid and latch it.

3-37. Preparation for shipment.

This section contains the instructions for preparing the surgical light for shipment as an individual item of equipment.

NOTE

No additional preparation for shipment is required when packed into an ISO shelter or other bulk shipping container providing physical and environmental protection.

a. Place the surgical light in an appropriate cardboard carton.

b. Transfer the surgical light to the unit transportation point for crating and shipping.

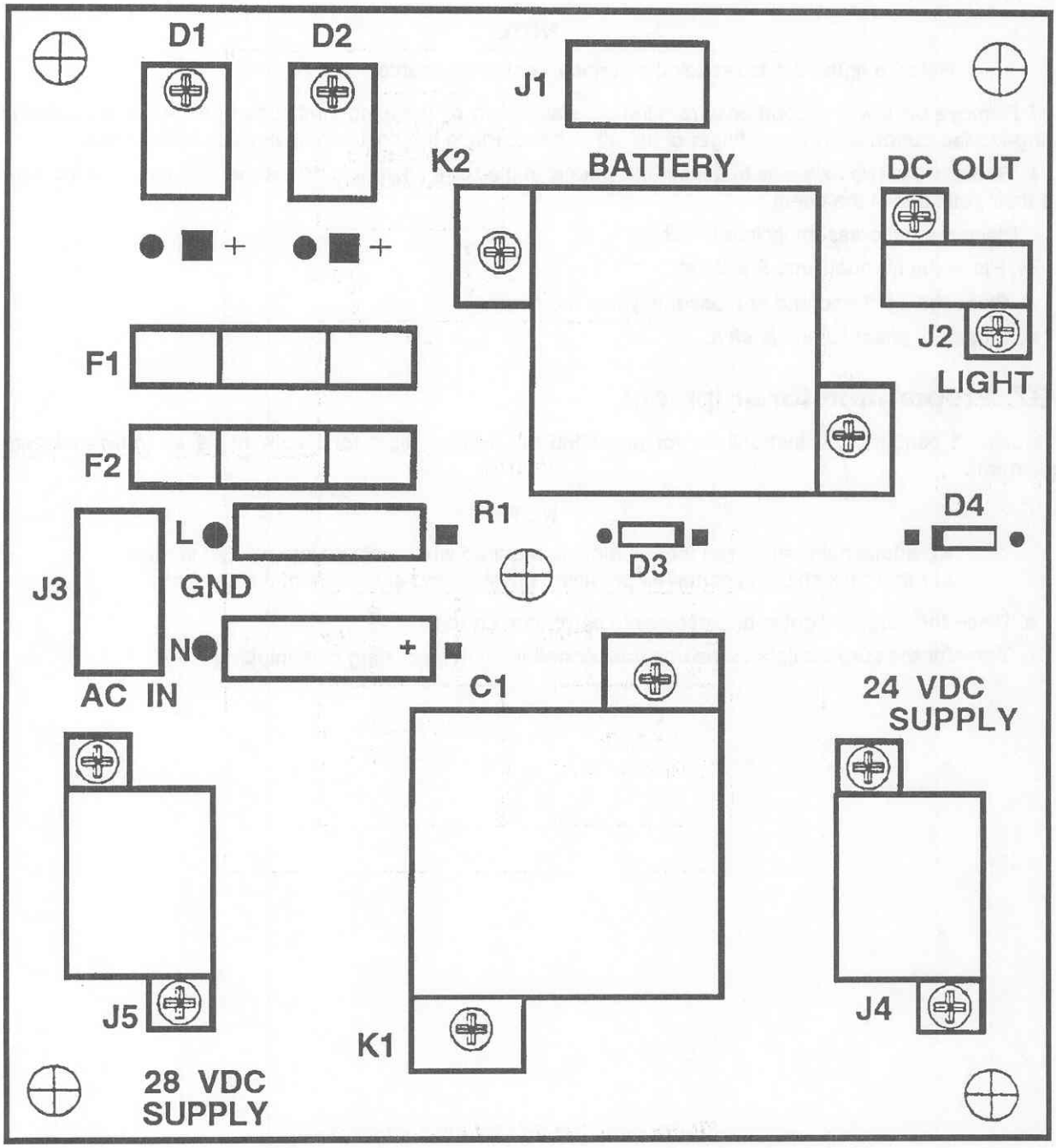

Figure 3-54. Relay PCB.

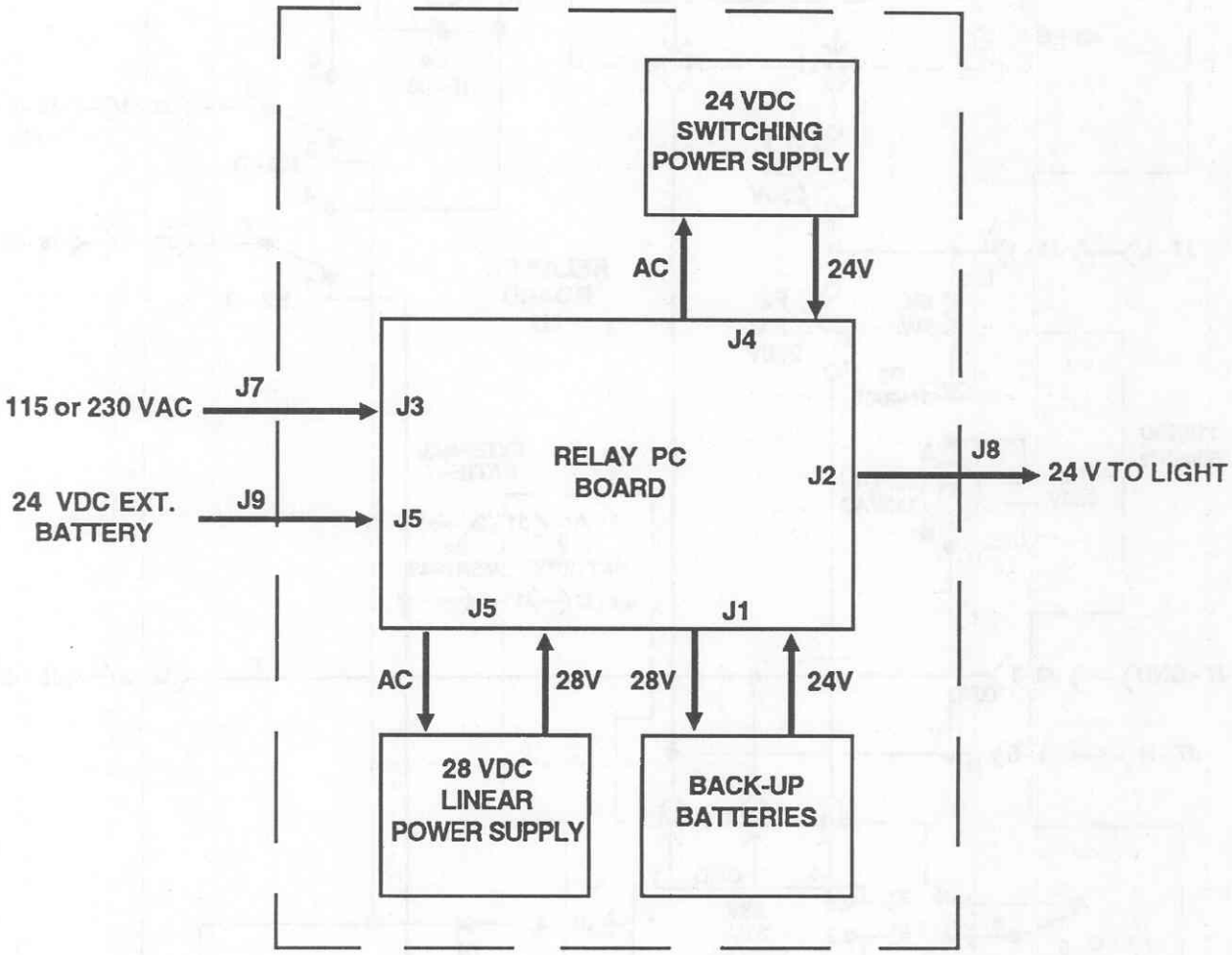

Figure 3-55. Electrical block diagram.

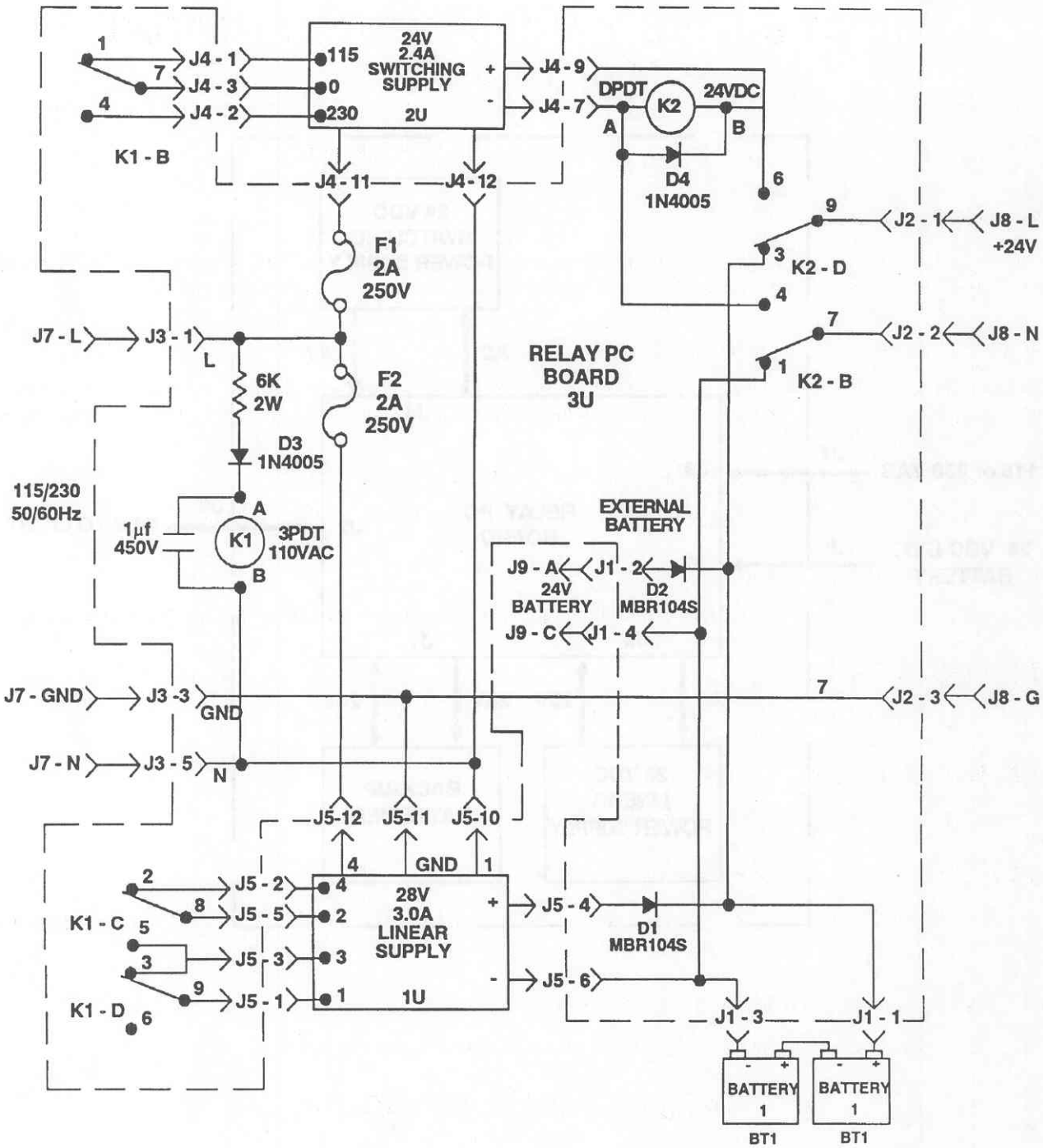

Figure 3-56. Power supply wiring diagram.

CHAPTER 4

DIRECT SUPPORT AND GENERAL SUPPORT MAINTENANCE

Section I. GENERAL INFORMATION

4-1. Overview.

This chapter provides for maintenance that is beyond the capability, capacity, and authorization for unit level maintenance personnel. The procedures in this chapter should not be attempted at the unit level.

4-2. Tools and test equipment.

Common tools and test equipment required for support maintenance of the equipment are listed in appendix B, section III. Refer to your unit's MTOE or installation table of distribution and allowances (TDA) for authorized items.

4-3. Components of end item and basic issue items.

Components of end item and basic issue items are listed in appendix C, section II and III.

4-4. Expendable supplies.

Expendable and durable supplies and materials for support maintenance are listed in appendix D, section II.

4-5. Repair parts.

Repair parts required for support maintenance are listed in appendix E, section II.

4-6. Special tools.

Special tools required for support maintenance are listed in appendix E, section III.

4-7. Additional authorization item.

An additional item required for emergency operation of the surgical light on external 24 VDC electrical power is identified in appendix F, section II of this manual.

4-8. Support maintenance services.

Specific procedures and instructions for support maintenance services are not currently available.

Section II. TROUBLESHOOTING

4-9. General.

Specific repair procedures for the PCB, power supplies, base assembly, and arm assembly are not currently available.

APPENDIX A

REFERENCES

A-1. Army regulations.

AR 40-61	Medical Logistics Policies and Procedures
AR 710-2	Supply Policy Below the Wholesale Level
AR 725-50	Requisitioning, Receipt, and Issue System

A-2. Technical manual.

TM-DPSC-6500-RPL	Medical Materiel: Medical Repair Parts Reference List

A-3. Technical bulletins.

TB MED 7	Maintenance Expenditure Limits for Medical Materiel
TB 8-6500-MPL	Mandatory Parts List for Medical Equipment
TB 38-750-2	Maintenance Management Procedures for Medical Equipment
TB 740-10/DLAM 4155.5/AFR 67-43	Quality Control, Depot Storage Standards, Appendix M, Medical Supplies

A-4. Field manual.

FM 21-11	First Aid for Soldiers

A-5. Supply bulletin.

SB 8-75-( )-series	Army Medical Department Supply Information

A-6. Other publications.

(This publication may be obtained from Commander, U.S. Army Medical Materiel Agency, ATTN: SGMMA-M, Frederick, MD 21702-5001.)

User Manual, Installation/Operation/Service/Parts, Model 2410MB Surgical Field Light, MDT Diagnostics Company.

APPENDIX B
MAINTENANCE ALLOCATION CHART

Section I. INTRODUCTION

B-1. General.

a. This section provides a general explanation of all maintenance and repair functions authorized at various maintenance levels.

b. Section II designates overall responsibility for the performance of maintenance functions on the identified end item or component. The implementation of the maintenance functions upon the end item or component will be consistent with the assigned maintenance levels.

c. Section III lists the tools and test equipment required for each maintenance function as referenced from Section II.

d. Section IV contains supplemental instructions, explanatory notes, and/or illustrations required for a particular maintenance function.

B-2. Explanation of columns in section II.

a. Group Number, Column 1. The assembly group number (Group No.) column is a numerical group assigned to each assembly. The applicable assembly groups are listed in the maintenance allocation chart (MAC) in disassembly sequence beginning with the first assembly removed in a top down disassembly sequence.

b. Assembly Group, Column 2. This column contains a brief description of the components of each assembly group.

c. Maintenance Functions, Column 3. This column lists the various maintenance functions (A through K) and indicates the lowest maintenance level authorized to perform these functions. The symbol designations for the various maintenance levels are as follows:

C - Operator or crew

O - Unit maintenance

F - Direct support maintenance

H - General support maintenance

D - Depot maintenance

The maintenance functions are defined as follows:

A - Inspect. To determine serviceability of an item by comparing its physical, mechanical, and electrical characteristics with established standards.

B - Test. To verify serviceability and to detect electrical or mechanical failure by use of test equipment.

C - Service. To clean, to preserve, to charge, and to add lubricants, cooling agents, and air. If it is desired that elements, such as painting and lubricating, be defined separately, they may be so listed.

D - Adjust. To rectify to the extent necessary to bring into proper operating range.

E - Align. To adjust specified variable elements of an item to bring it to optimum performance.

F - Calibrate. To determine the corrections to be made in the readings of instruments or test equipment used in precise measurement. Consists of the comparison of two instruments, one of which is a certified standard of known accuracy, to detect and adjust any discrepancy in the accuracy of the instrument being compared with the certified standard.

G - Install. To set for use in an operational environment such as tents or International Standards Organization shelters.

H - Replace. To replace unserviceable items with serviceable like items.

I - Repair. Those maintenance operations necessary to restore an item to serviceable condition through correction of material damage to a specific failure. Repair may be accomplished at each level of maintenance.

J - Overhaul. Normally the highest degree of maintenance performed by the Army in order to minimize time work in process consistent with quality and economy of operation. It consists of that maintenance necessary to restore an item to completely serviceable condition as prescribed by a maintenance standard in technical publications for each item of equipment. Overhaul normally does not return an item to like new condition.

K - Rebuild. The highest degree of material maintenance. It consists of restoring equipment as nearly as possible to new condition in accordance with original manufacturing standards. Rebuild is performed only when required by operational considerations or other paramount factors and then only at the depot maintenance level.

d. Tools and Equipment, Column 4. This column is provided for referencing by code, the tools and test equipment (sec III) required to perform the maintenance functions.

e. Remarks, Column 5. This column is provided for referencing by code, the remarks (sec IV) pertinent to the maintenance functions.

B-3. Explanation of columns in section III.

a. Reference Code, Column 1. This column correlates to section II, column 4.

b. Maintenance Level, Column 2. This column identifies the maintenance levels using the tools and test equipment.

c. Nomenclature, Column 3. This column identifies the tools and test equipment.

d. National Stock Number, Column 4. This column provides the national stock number of the specific tools or test equipment.

B-4. Explanation of columns in section IV.

a. Reference Code, Column 1. This column correlates to section II, column 5.

b. Remarks, Column 2. This column provides supplemental information or explanatory notes pertinent to the maintenance function in section II.

Section II. MAINTENANCE ALLOCATION CHART FOR SURGICAL LIGHT

(1) GROUP NO.	(2) ASSEMBLY GROUP	(3) MAINTENANCE FUNCTIONS											(4) TOOLS AND EQUIPMENT	(5) REMARKS
		A	B	C	D	E	F	G	H	I	J	K		
00	Surgical Light	O 0.4	O 0.6	O 0.4			O 1.0		O 0.3	O 1.4	F 5.4	D 6.8	01,02,03, 04,05,06 07,08,09, 10,11,12, 13	A
01	Base Assembly												01,02,03, 04,05,06, 07,08,09, 10,11,12	
	Back-up Batteries		O 0.3						O 0.4				06	
	Linear Power Supply		O 0.5				O 0.4		O 0.4	O 0.8	F 2.2	D 4.0	01,02,03, 04,05,06, 07,08,09, 10,11,12	
	Switching Power Supply		O 0.5				O 0.4		O 0.4	O 0.8	F 2.2	D 4.0	01,02,03, 04,05,06, 07,08,09, 10,11,12	
	Relay PCB		O 0.5				O 0.4		O 0.4	O 0.6	F 2.0	D 3.4	01,02,03, 04,05,06, 07,08,09, 10,11,12	
	Post Support	O 0.2							O 0.3				01,02,04, 05	
	Wheel(s)	O 0.1							O 0.1				01,02,04, 05	
02	Support Posts	O 0.2		O 0.4		O 0.3			O 0.2	O 0.4			01,02,04, 05	
03	Arm Assembly												01,02,03, 04,05,06	

Section II. MAINTENANCE ALLOCATION CHART FOR SURGICAL LIGHT

(1) GROUP NO.	(2) ASSEMBLY GROUP	(3) MAINTENANCE FUNCTIONS											(4) TOOLS AND EQUIPMENT	(5) REMARKS
		A	B	C	D	E	F	G	H	I	J	K		
	Mount	O 0.1		O 0.2					O 0.8				01,02,03, 04,05	
	Gas Spring		O 0.2						O 0.8				01,02,03, 04,05	
	Cable		O 0.2						O 0.8	O 0.3			01,02,03, 04,05,06	
04	Lighthead												01,02,03, 04,05,06, 13	
	Lamp								O 0.2				04	
	Rocker Switch		O 0.2						O 0.4				01,02,03, 04,05,06	
	Heat Filter			O 0.2					O 0.3	O 0.3			01,02,03, 04,05	
	Reflector			O 0.3					O 0.6				01,02,03, 04,05	
	Lamp Contact	O 1.0							O 1.4				01,02,03, 04,05,06	
	Yoke	O 0.6		O 0.2					O 1.2				01,02,03, 04,05,06	
	Diffusion Lens			O 0.3					O 0.3				01,02,03, 04,05	
	Cable		O 0.1						O 0.1	O 0.3			01,02,03, 04,05,06	
05	Chest	O 0.2		O 0.3					O 0.1	O 0.6		D 2.4	01,02,03, 04,05	

Section III. TOOLS AND TEST EQUIPMENT FOR SURGICAL LIGHT

(1) REFERENCE CODE	(2) MAINTENANCE LEVEL	(3) NOMENCLATURE	(4) NATIONAL STOCK NUMBER
01	O,F,H,D	Tool Kit, Medical Equipment Maintenance and Repair: Repairmans	5180-00-611-7923
02	O,F,H,D	Tool Kit, Medical Equipment Maintenance and Repair: Organizational	5180-00-611-7924
03	F,H	Shop Equipment, Medical Maintenance: Depot (MEDSOM) Maintenance	4940-00-594-6455
04	O	Medical Materiel Set, Medical Maintenance, DEPMEDS	6545-01-332-0147
05	O	Medical Materiel Set, Medical Maintenance Augmentation, DEPMEDS	6545-01-332-0149
06	O,F,H,D	Multimeter, AN/USM 486	6625-01-145-2430
		or	
		Multimeter, AN/PSM 45A	6625-01-265-6000
07	O,F,H,D	Tester, Current Leakage, TS 2514/P	6625-01-142-8233
08	O,F,H,D	Oscilloscope, AN/USM 488	6525-01-187-7847
		or	
		Oscilloscope, OS291/G	6625-01-258-0022
09	O,F,H,D	Test Set, Circuit Component, TS 4138/P	6625-01-255-0839
10	O,F,H,D	Tester, Semiconductor, TS 1836 D/U	6625-00-138-7320
11	O,F,H,D	Generator, Signal, SG1171A/U	6625-01-216-9684
		or	
		Generator, Signal, SG1170	6625-01-120-3501
12	O,F,H,D	Counter, Electronic, Digital, AN/USM 459	6625-01-271-3012
13	O,F,H,D	Meter, Footcandle, IM 248/P	6695-01-303-0294

Section IV. REMARKS FOR SURGICAL LIGHT

(1) REFERENCE CODE	(2) REMARKS
A	Perform an annual electrical safety inspection and test. Perform the inspection and test after repair or replacement of electrical/electronic components.

APPENDIX C
COMPONENTS OF END ITEM AND BASIC ISSUE ITEMS LISTS

Section I. INTRODUCTION

C-1. Scope.

This appendix lists components of end item and basic issue items for the equipment to help you inventory items required for safe and efficient operation.

C-2. General.

The Components of End Item and Basic Issue Items lists are divided into the following sections.

a. Section II. Components of End Item. These items are part of the end item, but are removed and separately packaged for transportation or shipment. As part of the end item, these items must be with the end item whenever it is issued or transferred between property accounts.

b. Section III. Basic Issue Items. These are the minimum essential items required to place the equipment in operation, to operate it, and to perform emergency repairs. Basic issue items must be with the equipment during operation and whenever it is transferred between property accounts. This manual is your authority to request or requisition basic issue items, based on MTOE authorization of the end item.

C-3. Explanation of columns.

The following provides an explanation of columns found in both listings:

a. Item Number, Column 1. This column indicates the item number assigned to the item.

b. National Stock Number, Column 2. This column indicates the national stock number assigned to the item.

c. Description, Column 3. This column indicates the federal item name and, if required, a minimum description to identify and locate the item. The last line for each item indicates the commercial and government entity (CAGE) code in parentheses followed by the part number.

d. Unit of Measure, Column 4. This column indicates the unit of measure used in performing the actual operational or maintenance function. This measure is expressed by a two-character alphabetical abbreviation. These abbreviations are listed in the glossary.

e. Quantity, Column 5. This column indicates the quantity (QTY) of the item(s) provided with the equipment.

Section II. COMPONENTS OF END ITEM FOR SURGICAL LIGHT

(1) ITEM NUMBER	(2) NATIONAL STOCK NUMBER	(3) DESCRIPTION	(4) UNIT OF MEASURE	(5) QTY
	NO COMPONENTS ARE APPLICABLE FOR THIS END ITEM.			

Section III. BASIC ISSUE ITEMS FOR SURGICAL LIGHT

(1) ITEM NUMBER	(2) NATIONAL STOCK NUMBER	(3) DESCRIPTION	(4) UNIT OF MEASURE	(5) QTY
1		Manual, User (Rev C) (32510) 350351	EA	2
2		Case (32510) DPSC Drawing No. 25010	EA	1
3		Packing, Foam Insert (32510) DPSC Drawing No. 25010	EA	1

APPENDIX D
EXPENDABLE AND DURABLE SUPPLIES AND MATERIALS LIST

Section I. INTRODUCTION

D-1. Scope.

This appendix lists expendable and durable supplies and materials that are required to maintain the equipment. This listing is authorization to requisition and retain the items if not otherwise authorized.

D-2. Explanation of columns.

a. Item Number, Column 1. The item number (Item No.) is sequentially assigned.

b. Level, Column 2. This column identifies the lowest level of maintenance that requires the listed item. An explanation of the alphabetical character is provided in appendix B, section I of this manual.

c. National Stock Number, Column 3. This column indicates the national stock number assigned to the item.

d. Description, Column 4. This column indicates the federal item name and, if required, a minimum description to identify and locate the item. The last line for each item indicates the CAGE code in parentheses followed by the part number.

e. Unit of Measure, Column 5. This column indicates the unit of measure used in performing the actual operational or maintenance function. This measure is expressed by an alphabetical abbreviation. These abbreviations are listed in the glossary.

f. Quantity, Column 6. This column indicates the quantity (QTY) of the item(s) provided with the equipment.

Section II. EXPENDABLE AND DURABLE SUPPLIES AND MATERIALS LIST FOR SURGICAL LIGHT

(1) ITEM NO.	(2) LEVEL	(3) NATIONAL STOCK NUMBER	(4) DESCRIPTION	(5) UNIT OF MEASURE	(6) QTY
1	O	7920-01-004-7847	Cloth, Cleaning (97327) Rymple Cloth 301	RO	1
2	O	4940-01-087-3458	Workstation, ESD Control (12038) 4560901	EA	1
			or		
		4940-01-250-4236	Workstation, ESD Control (81349) MIL-W-87893-30	EA	1
			or		
		5920-01-253-5368	Workstation, ESD Control (12038) ASGK-MIL	EA	1
3	O	5970-00-419-4290	Tape, Insulation, Electrical (81349) MIL-I-24391	RO	1
4	O	6810-00-753-4993	Alcohol, Isopropyl (81348) MILSPEC	CN	1
5	O	6510-00-634-7079	Sponge, Surgical (Cotton Balls) (81348) MILSPEC	BG	1
6	O	6510-00-201-3000	Cotton, Purified, USP, Rolled, 4.5 in wide (81348) MILSPEC	RO	1

APPENDIX E

REPAIR PARTS AND SPECIAL TOOLS LISTS

Section I. INTRODUCTION

E-1. Scope.

This manual lists spare and repair parts, special tools, special test equipment; and other special support equipment required for the performance of unit level, direct support, general support, and depot level maintenance. It authorizes the requisitioning and issue of spare and repair parts in consonance with the MAC (app B).

E-2. General.

The Repair Parts and Special Tools Lists are divided into the following sections:

a. Repair Parts, Section II. A list of repair parts authorized for the performance of maintenance in figure number and item number sequence.

b. Special Tools, Test, and Support Equipment, Section III. A list of special tools, test, and support equipment authorized for the performance of maintenance.

E-3. Explanation of columns in section II.

a. Illustration, Column 1.

(1) *Figure Number.* This column indicates the figure number (FIG NO.) of the illustration on which the item is shown.

(2) *Item Number.* This column indicates the item number (ITEM NO.) used to identify each item on the illustration.

b. National Stock Number, Column 2. This column indicates the national stock number assigned to the item.

c. Description, Column 3. This column indicates the federal item name of the item. The last line for each item indicates the CAGE code in parentheses followed by the part number.

d. Unit of Measure, Column 4. This column indicates the unit of measure used in performing the actual operational or maintenance function. This measure is expressed by a two-character alphabetical abbreviation.

e. Quantity, Column 5. This column indicates the quantity (QTY) of the item(s) to be used with or on the illustrated component, assembly, module, or end item.

E-4. Explanation of columns in section III.

a. Item Number, Column 1. This number is sequentially assigned.

b. Level, Column 2. This column identifies the lowest level of maintenance that requires the listed item. An explanation of the alphabetical character is provided in appendix B, section I of this manual.

c. National Stock Number, Column 3. This column indicates the national stock number assigned to the item.

d. Description, Column 4. This column indicates the federal item name and, if required, a minimum description to identify and locate the item. The last line for each item indicates the CAGE code in parentheses followed by the part number.

e. Unit of Measure, Column 5. This column indicates the unit of measure used in performing the actual operational or maintenance function. This measure is expressed by a two-character alphabetical abbreviation.

f. Quantity, Column 6. This column indicates the quantity (QTY) of the item(s) to be used with or on the equipment.

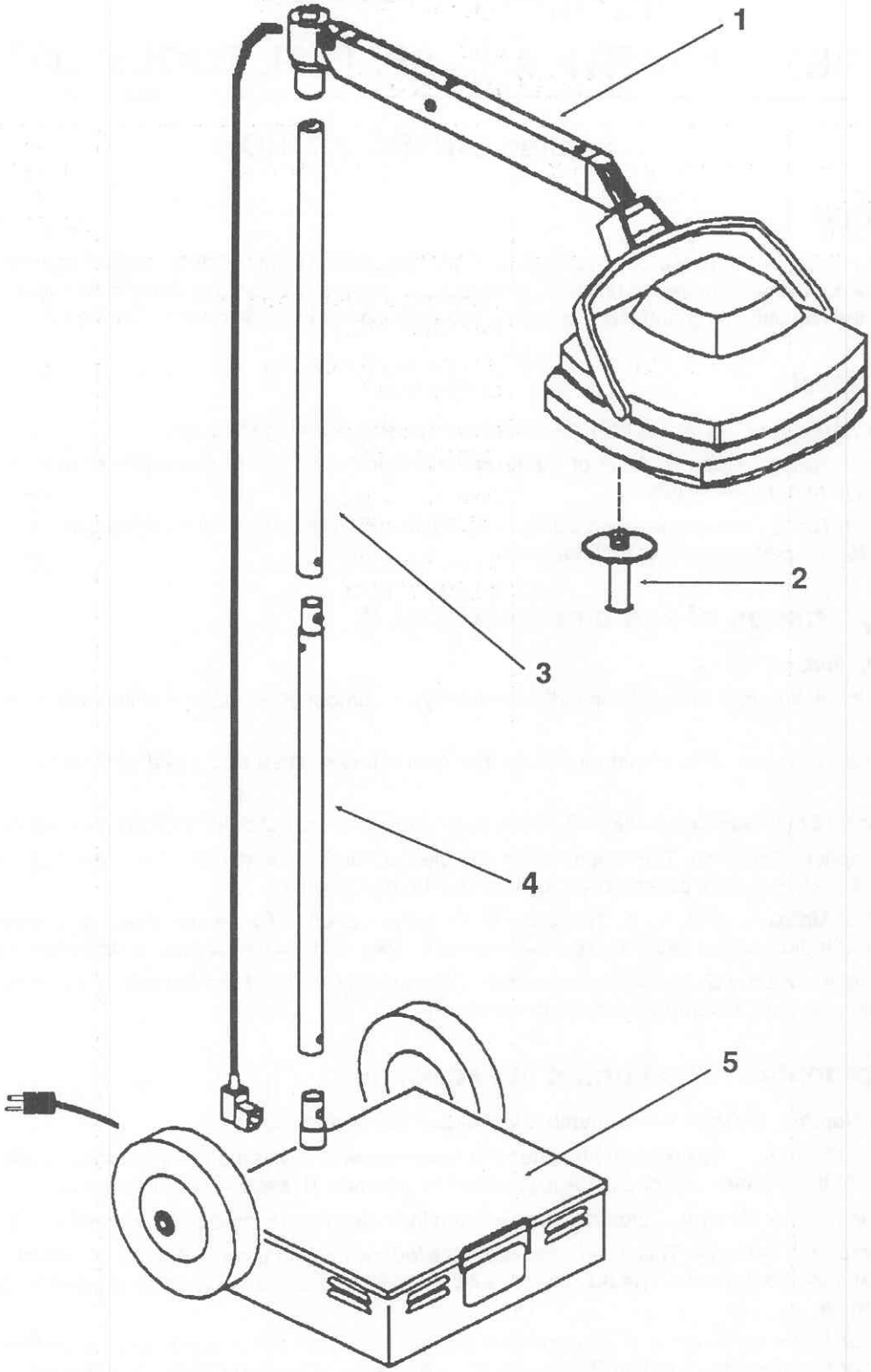

Figure E-1. Surgical light.

Section II. REPAIR PARTS LIST FOR SURGICAL LIGHT

(1) ILLUSTRATION		(2) NATIONAL STOCK NUMBER	(3) DESCRIPTION	(4) UNIT OF MEASURE	(5) QTY
FIG NO.	ITEM NO.				
E-1	1		Lighthead and Arm Assembly (32510) 311072	EA	1
E-1	2	5340-01-258-9544	Handle, Manual Control (32510) 65196	EA	2
E-1	3		Post, Upper Support (32510) 311062	EA	1
E-1	4		Post, Lower Support (32510) 311061	EA	1
E-1	5		Base Assembly (32510) 311073	EA	1

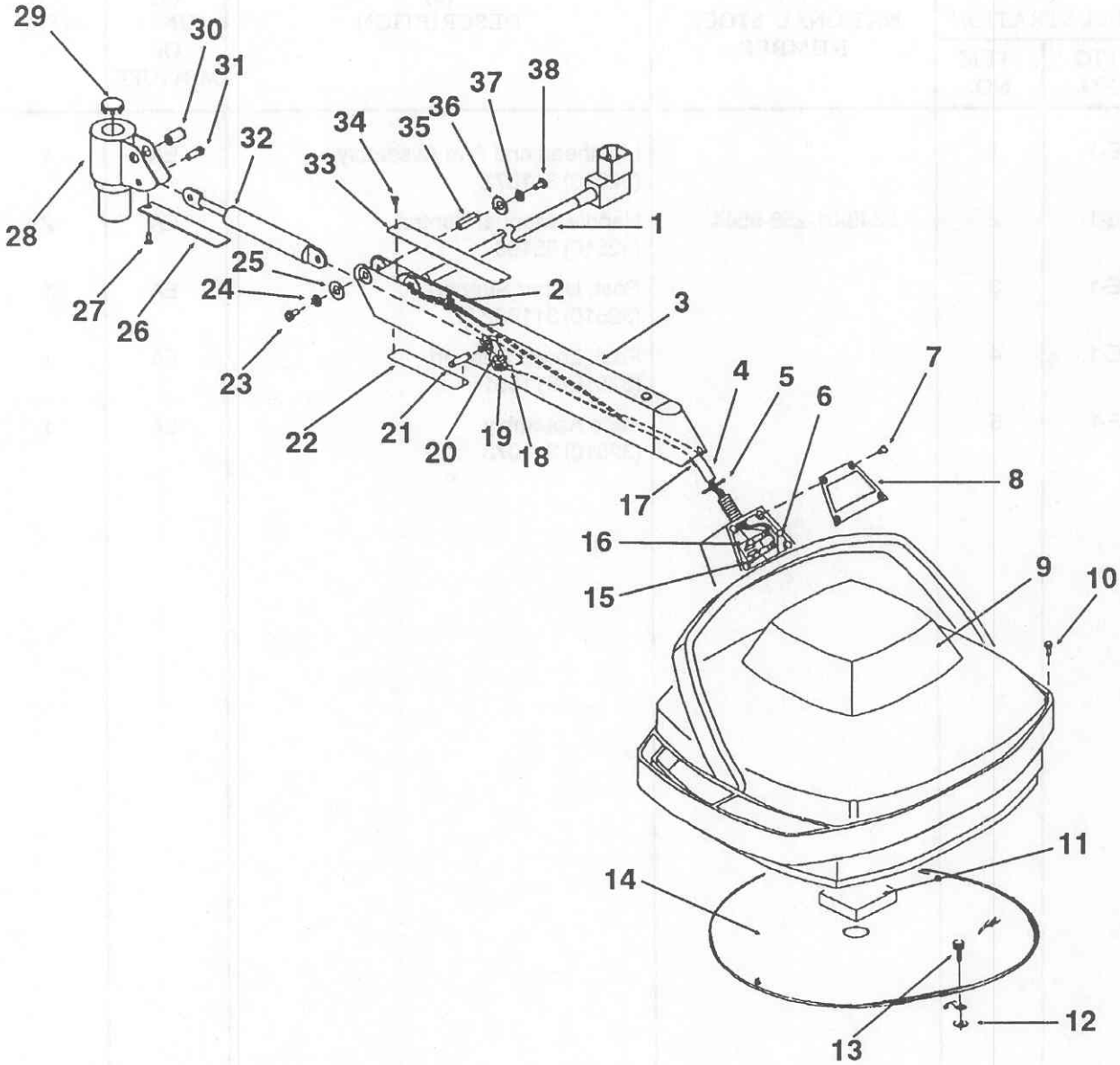

Figure E-2. Arm and lighthead assembly.

Section II. REPAIR PARTS LIST FOR SURGICAL LIGHT

(1) ILLUSTRATION FIG NO.	(1) ILLUSTRATION ITEM NO.	(2) NATIONAL STOCK NUMBER	(3) DESCRIPTION	(4) UNIT OF MEASURE	(5) QTY
E-2	1	6150-01-358-6425	Cord Assembly, Electrical (Lighthead Cable) (13106) 311067	EA	1
E-2	2		Tie, Cable (32510) 45572	EA	1
E-2	3		Arm Assembly, Counterbalance (32510) 65091	EA	1
E-2	4		Tubing, Plastic (32510) R1922	IN	AR
E-2	5		Washer, Keyed (32510) 65026	EA	1
E-2	6		Wire Nut, No. 18 or No. 16 (32510) B0105	EA	2
E-2	7		Screw, Phillips, Oval Head, Self-tapping, Black, 6-32 by 5/16 in (32510) E6876	EA	4
E-2	8		Cover, Rocker Switch (32510) 65175	EA	1
E-2	9		Cover, Lighthead (32510) 513915	EA	1
E-2	10		Screw, Hex Socket Head, 6-32 by 3/8 in (32510) E6333	EA	4
E-2	11		Pad, Foam, Protective (32510) 67487	EA	1
E-2	12		Ring, Retaining, External, No. 8 Diameter Shaft (32510) E6290	EA	3
E-2	13		Thumbscrew, 8-32 by 3/8 in (32510) 65040	EA	3
E-2	14		Lens, Diffusion (32510) 65014	EA	1
E-2	15		Terminal, Quick-fit (32510) 65199	EA	4
E-2	16		Switch, Rocker, ON/OFF (32510) 65137	EA	1

Section II. REPAIR PARTS LIST FOR SURGICAL LIGHT

(1) ILLUSTRATION		(2) NATIONAL STOCK NUMBER	(3) DESCRIPTION	(4) UNIT OF MEASURE	(5) QTY
FIG NO.	ITEM NO.				
E-2	17		Stop, Yoke Rotation (32510) 67484	EA	1
E-2	18		Nut, Hex, Green, 10-32 (32510) E6886	EA	1
E-2	19		Washer, No. 10, Internal Tooth Lock (32510) E2044	EA	1
E-2	20		Ring, Retaining, 1/4 in Diameter Shaft (32510) E2042	EA	1
E-2	21		Pin, Spring Mounting (32510) 65163	EA	1
E-2	22		Decal, "DANGER - EXPLOSION HAZARD" (32510) 65141	EA	1
E-2	23		Screw, Hex Socket, Button Head, 10-32 by 3/8 in (32510) 25191	EA	2
E-2	24		Bushing, Trim (32510) 65075	EA	2
E-2	25		Washer, Spring, 3/8 in (32510) 65080	EA	2
E-2	26		Cover, Pivot Access (32510) 65028	EA	2
E-2	27		Screw, Phillips, Oval Head, Self-tapping, Black, 6-32 by 5/16 in (32510) E6876	EA	1
E-2	28		Mount, Arm Assembly, Counterbalance (32510) 65091	EA	1
E-2	29		Button Plug, 11/16 in Diameter Hole (32510) 65060	EA	1
E-2	30		Bushing, Arm Pivot (32510) 65038	EA	1
E-2	31		Pin, Groove, 1/4 in Diameter by 3/4 in Long (32510) E6875	EA	1

Section II. REPAIR PARTS LIST FOR SURGICAL LIGHT

(1) ILLUSTRATION		(2) NATIONAL STOCK NUMBER	(3) DESCRIPTION	(4) UNIT OF MEASURE	(5) QTY
FIG NO.	ITEM NO.				
E-2	32	3040-01-257-9988	Cylinder Assembly (Gas Spring) (32510) 65024	EA	1
E-2	33		Cover, Upper Access Plate (32510) 65145	EA	1
E-2	34		Screw, Phillips, Pan Head, Self-tapping, 4-40 by 3/16 in (32510) E6884	EA	2
E-2	35		Pin, Arm Pivot (32510) 65074	EA	1
E-2	36		Washer, Spring, 3/8 in (32510) 65080	EA	1
E-2	37		Bushing, Trim (32510) 65075	EA	1
E-2	38		Screw, Hex Socket, Button Head, 10-32 by 3/8 in (32510) 25191	EA	1

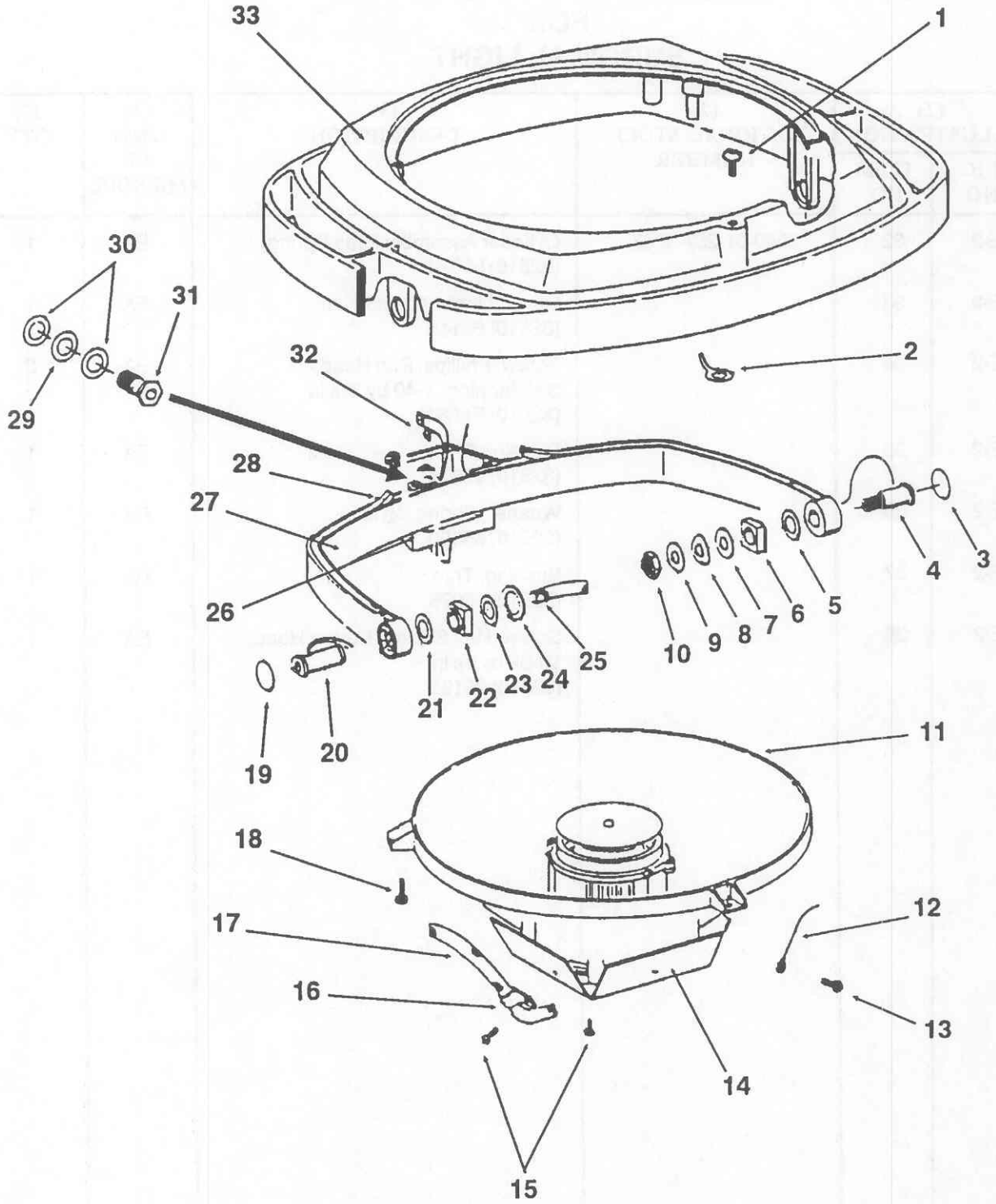

Figure E-3. Lighthead assembly.

Section II. REPAIR PARTS LIST FOR SURGICAL LIGHT

(1) ILLUSTRATION		(2) NATIONAL STOCK NUMBER	(3) DESCRIPTION	(4) UNIT OF MEASURE	(5) QTY
FIG NO.	ITEM NO.				
E-3	1		Screw, Hex Socket, Button Head, 5/16-18 by 1/2 in (32510) E6342	EA	1
E-3	2		Strap, Lens Retaining (32510) 65039	EA	1
E-3	3		Insert, Pivot Pin Trim (32510) 65045	EA	2
E-3	4		Pin, Lighthead Pivot, Ground Wire (32510) 65031	EA	1
E-3	5		Washer, Flat, 1/2 in (32510) E5325	EA	1
E-3	6		Bushing, Lighthead Pivot (32510) 65001	EA	1
E-3	7		Washer, Flat, 3/8 in (32510) E0245	EA	1
E-3	8		Washer, Spring, 3/8 in (32510) E0188	EA	1
E-3	9		Washer, Flat, 3/8 in (32510) E0245	EA	1
E-3	10		Nut, Lock, 3/8-24 (32510) E6877	EA	1
E-3	11		Reflector Assembly (32510) 311090	EA	1
E-3	12		Wire Assembly, Ground (32510) 65088	EA	1
E-3	13		Screw, Hex Head, Ground, 10-32 by 3/8 in (32510) E5025	EA	1
E-3	14		Plate, Heat Dissipation (32510) 65019	EA	1
E-3	15		Screw, Phillips, Pan Head, 8-32 by 5/16 in (32510) E5025	EA	2
E-3	16		Clamp, Cable, 3/16 in Diameter (32510) 43399	EA	1

Section II. REPAIR PARTS LIST FOR SURGICAL LIGHT

(1) ILLUSTRATION		(2) NATIONAL STOCK NUMBER	(3) DESCRIPTION	(4) UNIT OF MEASURE	(5) QTY
FIG NO.	ITEM NO.				
E-3	17		Tubing, Plastic (Wiring Sleeve) (32510) R3278	IN	AR
E-3	18		Screw, Phillips, Pan Head, Self-tapping, Chrome, No. 10 by 1/2 in (32510) E4821	EA	3
E-3	19		Insert, Pivot Pin Trim (32510) 65045	EA	1
E-3	20		Pin, Lighthead Pivot, Lamp Wires (32510) 65000	EA	1
E-3	21		Washer, Flat, 1/2 in (32510) E5325	EA	1
E-3	22		Bushing, Lighthead Pivot (32510) 65001	EA	1
E-3	23		Washer, Flat, 1/2 in (32510) E5325	EA	1
E-3	24		Ring, Retaining, 1/2 in Diameter Shaft (32510) E6894	EA	1
E-3	25		Tie, Cable (32510) 33511	EA	1
E-3	26		Bumper, Stop (32510) 65198	EA	1
E-3	27		Yoke, Lighthead Mounting (32510) 65134	EA	1
E-3	28		Strip, Yoke Gasket (32510) 65063	EA	2
E-3	29		Washer, Spring, 1/2 in (32510) E2002	EA	1
E-3	30		Washer, Flat, 1/2 in (32510) E5325	EA	2
E-3	31		Pin, Yoke Pivot (32510) 65030	EA	1
E-3	32		Terminal, Quick-fit (32510) 65119	EA	4
E-3	33		Housing, Lighthead (32510) 513916	EA	1

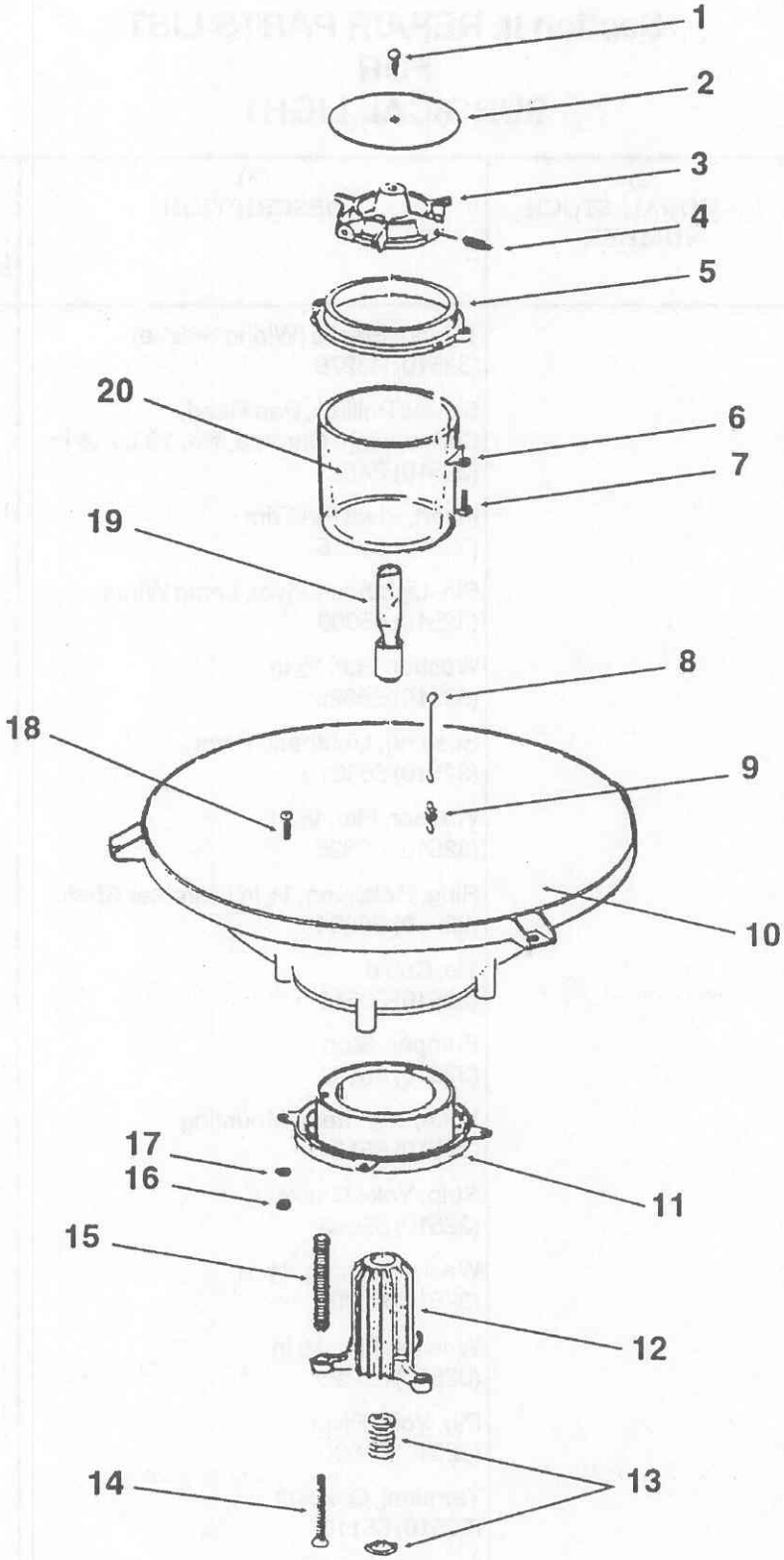

Figure E-4. Reflector assembly.

Section II. REPAIR PARTS LIST FOR SURGICAL LIGHT

(1) ILLUSTRATION		(2) NATIONAL STOCK NUMBER	(3) DESCRIPTION	(4) UNIT OF MEASURE	(5) QTY
FIG NO.	ITEM NO.				
E-4	1		Screw, Phillips, Pan Head, Self-tapping, Chrome, 6-32 by 1/4 in (32510) E2194	EA	1
E-4	2		Disc, Baffle (32510) 516771	EA	1
E-4	3		Baffle, Glass Heat Filter, Bottom (32510) 516770	EA	1
E-4	4		Plunger, Ball (32510) 517088	EA	4
E-4	5		Ring, Heat Cylinder Bottom (32510) 516769	EA	1
E-4	6	5340-01-258-6491	Clip, Spring Tension (32510) 65065	EA	2
E-4	7		Screw, Phillips, Pan Head, Self-tapping, 6-32 by 3/8 in (32510) E2169	EA	2
E-4	8		Hook, Baffle Retaining (32510) 65032	EA	1
E-4	9	5360-01-259-6059	Spring, Helical Compression (32510) 65064	EA	3
E-4	10		Reflector (32510) 516766	EA	1
E-4	11		Mounting, Heat Sink (32510) 65004	EA	1
E-4	12		Bulb Socket, Heat Sink (32510) 65003	EA	1
E-4	13		Bulb Socket Assembly (32510) 67501	EA	1
E-4	14		Screw, Phillips, Flat Head, 10-32 by 1-1/2 in (32510) E6567	EA	3
E-4	15	5360-01-258-9597	Spring, Helical Compression (32510) 65062	EA	3
E-4	16		Nut, Hex, 6-32 (32510) E5180	EA	4

Section II. REPAIR PARTS LIST FOR SURGICAL LIGHT

(1) ILLUSTRATION		(2) NATIONAL STOCK NUMBER	(3) DESCRIPTION	(4) UNIT OF MEASURE	(5) QTY
FIG NO.	ITEM NO.				
E-4	17		Washer, No. 6, Helical Spring Lock (32510) E4788	EA	3
E-4	18		Screw, Phillips, Pan Head, 6-32 by ½ in (32510) E5015	EA	4
E-4	19	6240-01-358-6426	Bulb, Tungsten-Halogen, 24 V, 60 W (13106) 516767	EA	1
E-4	20		Heat Filter, Glass, Cylindrical (32510) 516768	EA	1

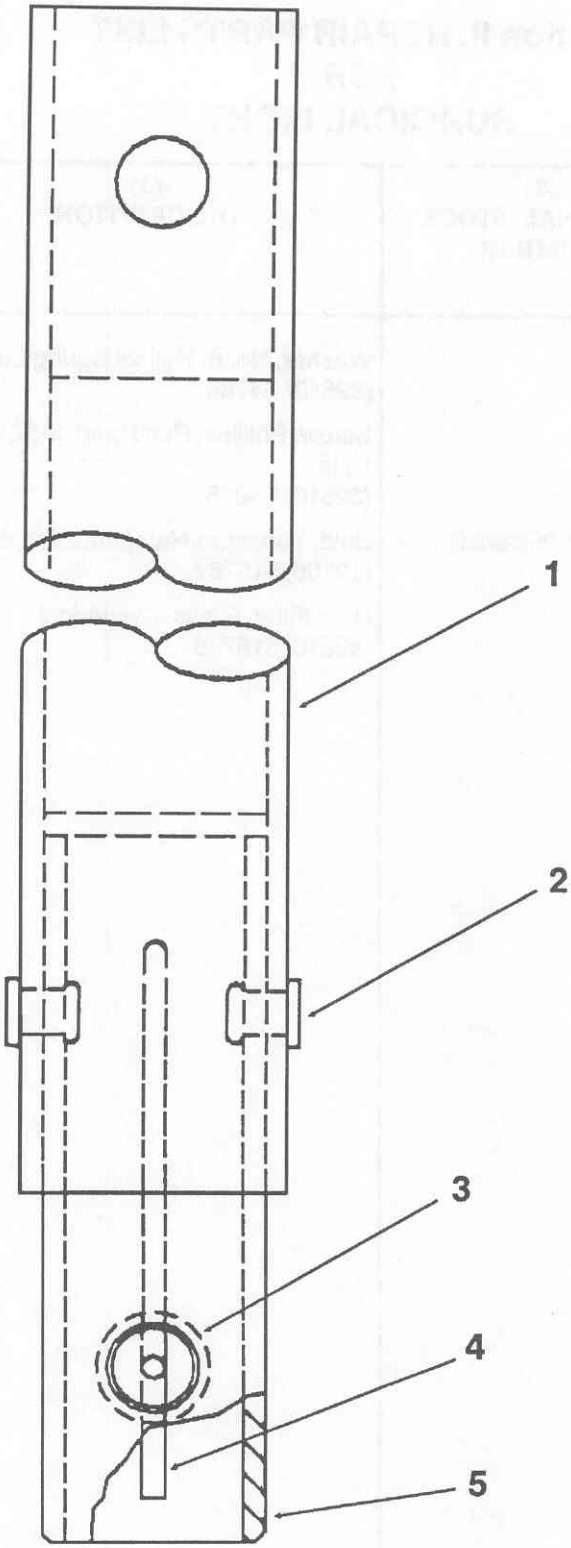

Figure E-5. Lower post assembly.

Section II. REPAIR PARTS LIST FOR SURGICAL LIGHT

(1) ILLUSTRATION		(2) NATIONAL STOCK NUMBER	(3) DESCRIPTION	(4) UNIT OF MEASURE	(5) QTY
FIG NO.	ITEM NO.				
E-5	1		Post, Lower Support (32510) 311060	EA	1
E-5	2		Rivet, 1/4 in by 1/2 in Long, Blind (32510) E6956	EA	2
E-5	3		Button, Post Release (32510) 311064	EA	1
E-5	4		Spring, Post Release Button (32510) 311065	EA	1
E-5	5		Coupling, Post (32510) 311063	EA	1

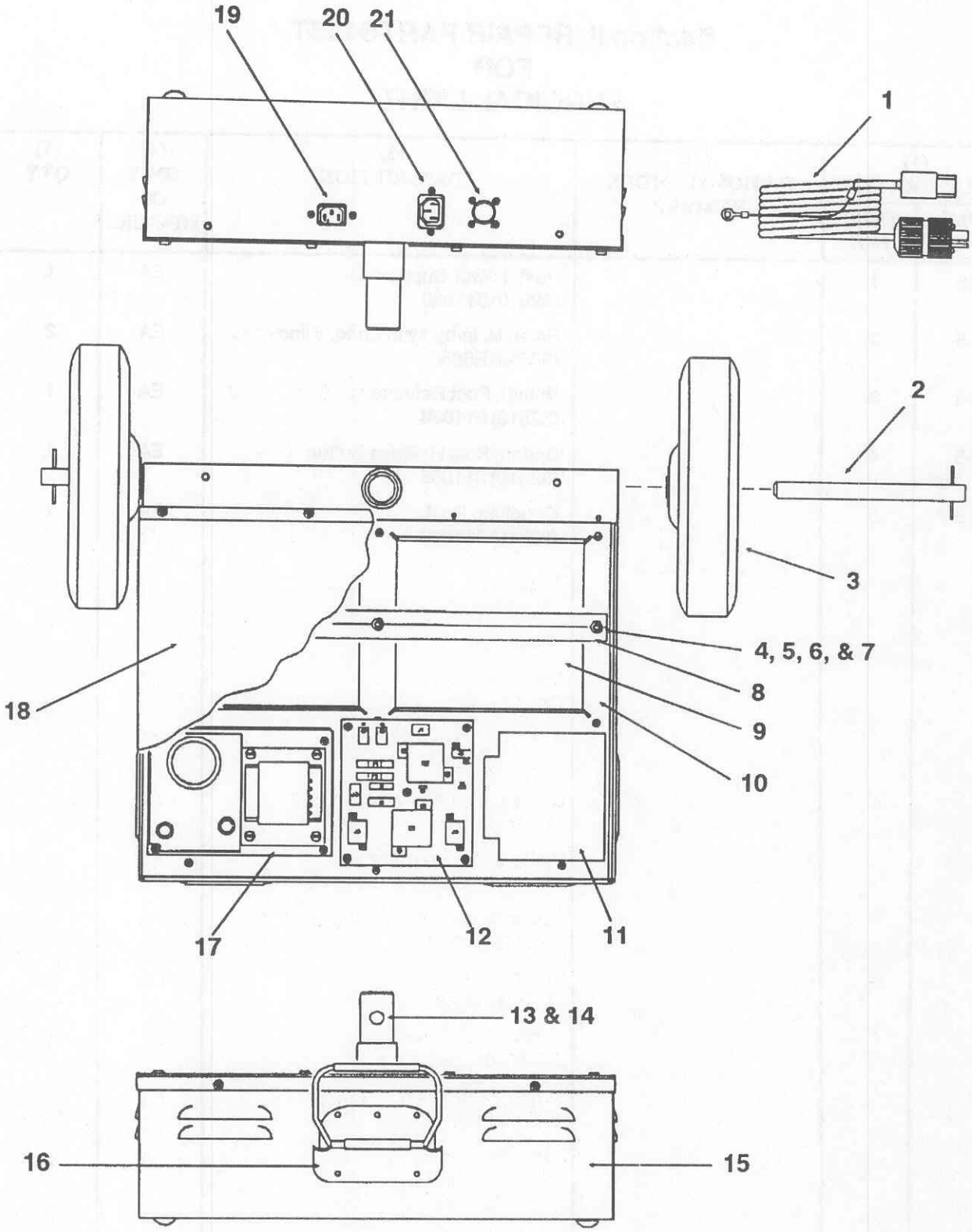

Figure E-6. Base assembly components.

Section II. REPAIR PARTS LIST FOR SURGICAL LIGHT

(1) ILLUSTRATION		(2) NATIONAL STOCK NUMBER	(3) DESCRIPTION	(4) UNIT OF MEASURE	(5) QTY
FIG NO.	ITEM NO.				
E-6	1		Power Cord (32510) 311078	EA	1
E-6	2		Pin, Axle, Self-locking, Quick Release (32510) 311053	EA	2
E-6	3		Wheel, Semi-pneumatic, 10-in Diameter (32510) 311054	EA	2
E-6	4		Post, Battery Hold Down, 1/4-20 by 3-7/8 in (32510) 311055	EA	3
E-6	5		Washer, Flat, 1/4 in id by 1/2 in od by 1/16 in Width (32510) E2177	EA	3
E-6	6		Washer, Helical Spring Lock, 1/4 in (32510) E4671	EA	3
E-6	7		Nut, Hex, 1/4-20 (32510) E2239	EA	3
E-6	8		Bracket, Battery Hold Down (32510) 311056	EA	1
E-6	9		Battery, Rechargeable, 12 VDC (32510) 311076	EA	2
E-6	10		Plate, Component Mounting (32510) 311052	EA	1
E-6	11		Power Supply (Switching), 24 VDC (32510) 311077	EA	1
E-6	12		PC Board, Relay (32510) 511226	EA	1
E-6	13		Button, Post Release (32510) 311064	EA	1
E-6	14		Spring, Post Release Button (32510) 311065	EA	1
E-6	15		Base Enclosure (32510) 311050	EA	1
E-6	16		Handle, Spring-loaded (32510) 311074	EA	1
E-6	17		Power Supply (Linear), 28 VDC (32510) 311088	EA	1

Section II. REPAIR PARTS LIST FOR SURGICAL LIGHT

(1) ILLUSTRATION		(2) NATIONAL STOCK NUMBER	(3) DESCRIPTION	(4) UNIT OF MEASURE	(5) QTY
FIG NO.	ITEM NO.				
E-6	18		Cover, Base Assembly (32510) 311051	EA	1
E-6	19		Receptacle, Power Cable (32510) 311075	EA	1
E-6	20		Receptacle, Lighthead Cable (32510) 311081	EA	1
E-6	21		Receptacle, Battery Power (32510) 311087	EA	1
E-6	*		Screw, Phillips, Pan Head, 4-40 by 1/4 in (32510) E0008	EA	6
E-6	*		Screw, Phillips, Flat Head, 4-40 by 1/4 in (32510) E4932	EA	4
E-6	*		Cap and Chain, Protective, Battery Power Receptacle (32510) 311086	EA	1
E-6	*		Screw, Phillips, Pan Head, 10-32 by 3/8 in (32510) E4941	EA	8
E-6	*		Washer, Helical Spring Lock, No. 10 (32510) E7034	EA	8
E-6	*		Spacer, 9/64 in id by 1/4 in od by 3/4 in Long (32510) 311089	EA	8
E-6	*		Screw, Phillips, Pan Head, 10-32 by 1-1/4 in (32510) E7093	EA	6
E-6	*		Washer, No. 6, Helical Spring Lock (32510) E7041	EA	6
E-6	*		Nut, Hex, 10-32 (32510) E7033	EA	6
E-6	*		Screw, Phillips, Pan Head, 6-32 by 1/4 in (32510) E5010	EA	4
E-6	*		Standoff (Spacer), 6-32 Internal Thread, 7/16 in Long (32510) 516811	EA	4

Section II. REPAIR PARTS LIST FOR SURGICAL LIGHT

(1) ILLUSTRATION FIG NO.	(1) ILLUSTRATION ITEM NO.	(2) NATIONAL STOCK NUMBER	(3) DESCRIPTION	(4) UNIT OF MEASURE	(5) QTY
E-6	*		Gasket, Base Cover (32510) R3500	IN	AR
E-6	*		Screw, Hex Head, Ground, 10-32 by 3/8 in (32510) E6645	EA	1
E-6	*		Washer, No. 10, Terminal Cup (32510) 61419	EA	4
E-6	*		Decal, Rating (32510) Not Available	EA	1
E-6	*		Washer, Flat, 3/16 in id by 3/8 in od by 1/32 in Width (32510) 16465	EA	4
E-6	*		Nut, Hex, Lock, 1/4-20 (32510) E7270	EA	4

* Indicates parts that are not shown in the illustration.

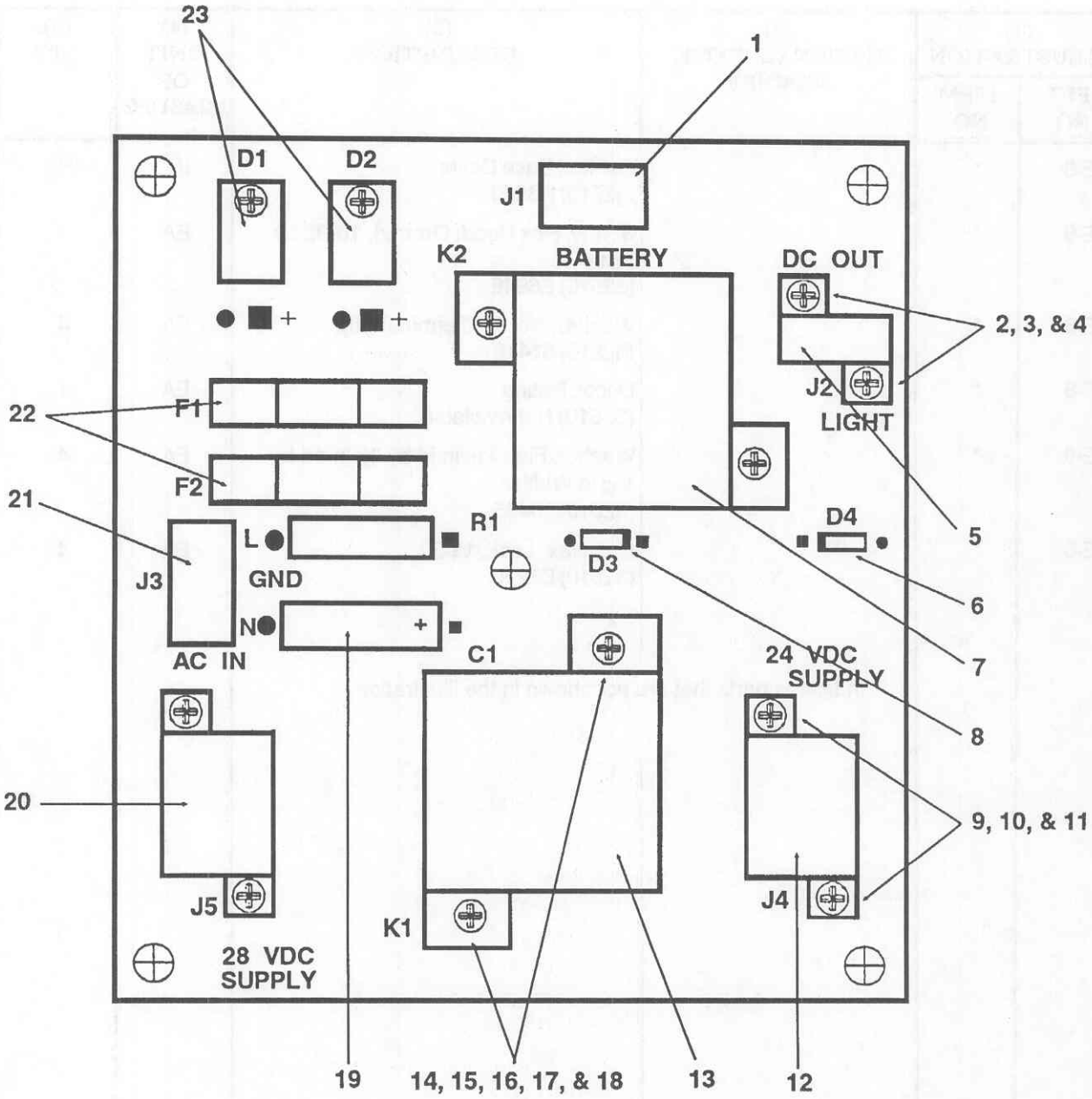

Figure E-7. Relay PCB components.

Section II. REPAIR PARTS LIST FOR SURGICAL LIGHT

(1) ILLUSTRATION		(2) NATIONAL STOCK NUMBER	(3) DESCRIPTION	(4) UNIT OF MEASURE	(5) QTY
FIG NO.	ITEM NO.				
E-7	1		Connector, 4-pin, "J1" (27264) 09-65-2048	EA	1
E-7	2		Washer, No. 4, Internal Tooth Lock (32510) E2053	EA	2
E-7	3		Nut, Hex, 4-40 (32510) E7028	EA	2
E-7	4		Screw, Phillips, Pan Head, 4-40 by 5/32 in (32510) E6610	EA	2
E-7	5		Connector, 3-pin, "J2" (09922) SMS3RE-3TK6	EA	1
E-7	6		Diode, "D4" (04713) 1N5002	EA	1
E-7	7	5945-01-294-4629	Relay, DPDT, 24 VDC, "K2" (77342) KUP-11D15-24	EA	1
E-7	8	5961-00-177-3611	Diode, "D3" (04713) IN5002	EA	1
E-7	9		Washer, No. 4, Internal Tooth Lock (32510) E2053	EA	2
E-7	10		Nut, Hex, 4-40 (32510) E7028	EA	2
E-7	11		Screw, Phillips, Pan Head, 4-40 by 5/32 in (32510) E6610	EA	2
E-7	12		Connector, 12-pin, "J4" (09922) SMS12RE-3TK6	EA	1
E-7	13	5945-01-079-8937	Relay, 3PDT, 110 VDC, "K1" (77342) KUP-14D15-110	EA	1
E-7	14		Screw, Phillips, Pan Head, 4-40 by 1/2 in (32510) E0013	EA	2
E-7	15		Washer, No. 4, Flat (32510) E4709	EA	2
E-7	16		Washer, No. 4, Internal Tooth Lock (32510) E2053	EA	2
E-7	17		Nut, Hex, 4-40 (32510) E7028	EA	2

Section II. REPAIR PARTS LIST FOR SURGICAL LIGHT

(1) ILLUSTRATION FIG NO.	(1) ILLUSTRATION ITEM NO.	(2) NATIONAL STOCK NUMBER	(3) DESCRIPTION	(4) UNIT OF MEASURE	(5) QTY
E-7	18	5360-00-471-4072	Spring, Hold-down (77342) 20C228	EA	2
E-7	19	5910-00-988-3371	Capacitor, 1μF, 450 VDC, "C1" (56289) TVA-1700	EA	1
E-7	20		Connector, 12-pin, "J5" (09922) SMS12RE-3TK6	EA	1
E-7	21		Connector, 3-pin, "J3" (27264) 10-63-1039	EA	1
E-7	22	3999-01-144-4210	Fuse, 2 A, 250 V, "F1" and "F2" (75915) 102-071	EA	2
E-7	23	5961-01-314-5735	Diode, 45 V, 10 A (09713) MBR1045	EA	2
E-7	*		Socket, Relay, 11-pin (77342) 27E305	EA	2

*Indicates a part that is not shown in the illustration.

Section III. SPECIAL TOOLS, TEST, AND SUPPORT EQUIPMENT FOR SURGICAL LIGHT

(1) ITEM NO.	(2) LEVEL	(3) NATIONAL STOCK NUMBER	(4) DESCRIPTION	(5) UNIT OF MEASURE	(6) QTY
1	O,F,H	5120-01-337-0707	Drift Punch Tool (26274) 209	EA	1
2	O,F,H	5120-00-789-0492	Retaining Ring Pliers (0M1G1) MILSPEC GGG-P-480	SE	1
3	O,F,H	5120-01-167-1667	Screwdriver Set, Six Point Tip (55719) STX70	SE	1

APPENDIX F
ADDITIONAL AUTHORIZATION LIST

Section I. INTRODUCTION

F-1. Scope.

This appendix lists additional items that are authorized for support of the surgical light.

F-2. General.

This list identifies items that should accompany the surgical light and that should be turned in with it. These items are all authorized to you by CTA, MTOE, TDA, or JTA.

F-3. Explanation of columns.

The following provides an explanation of columns found in the list:

a. Item Number, Column 1. This column indicates the item number assigned to the item.

b. National Stock Number, Column 2. This column indicates the national stock number assigned to the item.

c. Description, Column 3. This column indicates the federal item name and, if required, a minimum description to identify and locate the item. The last line for each item indicates the commercial and government entity (CAGE) code in parentheses followed by the part number.

d. Unit of Measure, Column 4. This column indicates the unit of measure used in performing the actual operational or maintenance function. This measure is expressed by a two-character alphabetical abbreviation. These abbreviations are listed in the glossary.

e. Quantity, Column 5. This column indicates the quantity (QTY) of the item(s) for optional use.

Section II. ADDITIONAL AUTHORIZATION LIST FOR SURGICAL LIGHT

(1) ITEM NUMBER	(2) NATIONAL STOCK NUMBER	(3) DESCRIPTION	(4) UNIT OF MEASURE	(5) QTY
1		Power Cable, 2-conductor *	EA	1

* This item is to be fabricated locally.

GLOSSARY

A	Ampere
AC	Alternating current
AFR	Air Force regulation
AMP (amp)	Ampere
app	Appendix
AR	Army regulation
AR	As required (used in the quantity column in appendix E)
AUX	Auxiliary
BG	Bag
BL	Blue
BR	Brown
C	Operator or crew
CAGE	Commercial and government entity
chap	Chapter
cm	Centimeter
CN	Can
CTA	Common table of allowances
D	Diode
D	Depot level maintenance
DA	Department of the Army
DC	Direct current
°K	Degrees Kelvin
DEPMEDS	Deployable Medical Systems
dia	Diameter
dichroic	The property of a surface that reflects light of one color and transmits light of another color
DLA	Defense Logistics Agency
DLAM	Defense Logistics Agency manual
DPDT	Double pole, double throw
DPSC	Defense Personnel Support Center
DS	Direct support
EA	Each
ESD	Electrostatic discharge
EXT	External
µF	Microfarad (one-millionth)
F	Direct support maintenance

fc	Foot-candle
fig (FIG)	Figure
FM	Field manual
FSC	Federal supply class
FSCM	Federal supply code for manufacturers. This is an obsolete term. CAGE (commercial and government entity) is the correct acronym.
ft	Foot (feet)
GND	Ground
GR	Green
GS	General support
H	General support maintenance
hrs	Hours
Hz	Hertz
J	Jack
id	Inner diameter
in	Inch
ISO	International Standards Organization
JTA	Joint table of allowances
kg	Kilogram
lbs	Pounds
lux	A unit of illumination equal to the direct illumination on a surface that is 1 meter from a uniform point source of 1 candle intensity or equal to 1 lumen per square meter.
MAC	Maintenance allocation chart
MAX	Maximum
MEDSOM	Medical supply, optical, and maintenance (battalion)
MPL	Mandatory parts list
MTOE	Modified table of organization and equipment
NO. (No.)	Number
NSN	National stock number
O	Unit maintenance
od	Outer diameter
para	Paragraph
PCB	Printed circuit board
PMCS	Preventive maintenance checks and services
QA	Quality assurance
QC	Quality control
QTY	Quantity

Rev	Revision
RO	Roll
RPL	Repair parts list
SB	Supply bulletin
SE	Set
sec	Section
TB	Technical bulletin
TDA	Table of distribution and allowances
TM	Technical manual
USP	United States Pharmacopia
V	Volt(s)
VAC	Volts alternating current
VDC	Volts direct current
Visible radiation	Electromagnetic radiation with wavelengths capable of causing the sensation of vision, ranging from 4,000 angstroms (extreme violet) to 7,700 angstroms (extreme red). Also known as light radiation and incorrectly referred to as visible light.
W	Watt(s)
Y	Yellow
3PDT	Three pole, double throw

INDEX

This index is organized alphabetically by topic and by subtopic. Topics and subtopics are identified by paragraph number.

Abbreviations, explanation, 1-2

Additional authorized items, 3-7, 4-7

Adjustments

  Angular, 1-11

  Rotational, 1-11

Angular drift, 3-19

Arm assembly, 1-11, 1-12, 1-13, 1-14, 1-15, 2-1, 2-2, 3-1, 3-8, 3-9, 3-11, 3-17, 3-18, 3-20, 3-21, 3-22, 3-31, 3-33, 3-34, 3-35, 3-36, 4-9

Arm assembly housing, 3-33

Assembly, 1-13, 3-9

Attachment wire, 3-8, 3-9, 3-24, 3-29, 3-36

Axis pattern, 3-25

Axle pins, 3-8, 3-9, 3-11, 3-36

Baffle assembly, 3-27, 3-28

Ball, spring-loaded pressure locking, 3-28

Base assembly, 1-11, 1-12, 1-13, 1-14, 1-15, 2-1, 2-5, 2-12, 3-1, 3-8, 3-9, 3-11, 3-22, 3-36, 4-9

Base assembly cover plate, 3-24, 3-28, 3-29

Base terminal, 3-31, 3-34

Basic issue items, 3-3, 4-3

Batteries, 1-11, 1-12, 1-13, 1-17, 2-1, 2-12, 3-13, 3-14, 3-15, 3-16, 3-36

Bayonet-base, 1-13, 3-27, 3-35

Breather valve, 1-13, 1-14

Button latch, 3-9, 3-36

Cable clamp, 3-35

Cable, lighthead, 3-9, 3-16, 3-24, 3-25, 3-29, 3-31, 3-32, 3-33, 3-34, 3-36

Cable, power, 3-8, 3-11, 3-15, 3-16, 3-24, 3-25, 2-1, 2-5, 2-12, 3-27, 3-28, 3-29, 3-31, 3-32, 3-33, 3-34, 3-36

Calibration, 3-23

Capabilities, 1-11

Characteristics, 1-11

Chest, storing/shipping, 1-11, 1-13, 1-14, 3-8, 3-11, 3-36

Cleaning, 2-7, 2-8, 2-9, 3-11, 3-16, 3-27, 3-28, 3-32, 3-35, 3-36

Clips, retaining, 3-28

Color-coded wiring, 3-31, 3-34, 3-35

Color correction, 1-13, 1-16
Color distortion, 1-1
Components of end item, 3-3, 4-3
Compression spring, 3-11, 3-27, 3-28
Contact spring, 3-35
Contacts, lamp, 3-35
Cover
  Base assembly, 3-24, 3-28, 3-29, 3-36
  Lighthead, 3-19, 3-25, 3-32, 3-35
  Metal upper access, 3-33
  Plastic lower access, 3-33
  Rocker switch, 3-20, 3-21, 3-22, 3-31, 3-34, 3-35
Data plate, 1-13, 1-14
Decals, 1-13
Deionized water, 2-7, 3-27
Design changes, 1-14
Dichroic-coated reflector, 1-12, 1-16
Diffusion lens, 1-12, 1-13, 1-16, 2-9, 3-9, 3-11, 3-16, 3-27, 3-28, 3-32, 3-35
Disassembly, 1-13
Disinfecting, 2-7, 2-9, 3-36
Distilled water, 2-7, 3-27
Drift
  Angular, 3-19
  Rotational, 3-20, 3-22, 3-34
  Vertical, 3-21, 3-33
Drift pin punch tool, 3-33
Durable supplies, 3-4, 4-4
Electrical color-coded wiring, 3-31, 3-34, 3-35
Electrical contact retaining ring, 3-35
Electrical receptacle, 1-12, 2-1, 2-12
Electromagnetic radiation, 1-16
Ethylene oxide, 2-10
Examination table, 1-15, 2-1, 2-6
Expendable supplies, 3-4, 4-4
External electrical power, 1-11, 1-17, 2-1, 2-3, 3-15, 3-16, 3-24

Features, 1-11
Filter, heat, 1-12, 1-13, 1-16, 2-9, 3-11, 3-26, 3-27, 3-28, 3-35
Flutes, 1-16
Foam, molded, 3-8
Foam pad, 3-9, 3-36
Focus screws, 3-25, 3-35
Foot-candle, 1-12, 1-13, 1-16, 3-11, 3-25
Foot-candle meter, 3-25
Forms, 1-3
Frequency, 1-11
Friction adjustment screws, 3-21
Fuse, 3-16, 3-26, 3-29
Fusion spot, 3-9, 3-27
Gas spring, 3-21, 3-33
Gasket, yoke, 3-35
Green electrical wire, 3-33, 3-35
Green slotted screw, 3-32, 3-35
Groove pin, 3-33
Grounding wire, 3-32, 3-35
Hammer, 3-33
Handle, 1-12, 1-14, 1-15, 2-1, 2-10, 3-8, 3-9, 3-11, 3-19, 3-20, 3-21
Heat dissipation plate, 3-32, 3-35
Heat filter, 1-12, 1-13, 1-16, 2-9, 3-11, 3-26, 3-27, 3-28
Heat shield, 1-13
Heat sink, 3-32, 3-35
Housing
  Arm assembly, 3-33
  Lighthead, 3-19, 3-25, 3-32
  Switch, 3-31
  Yoke, 3-31
Illuminated area, 2-4, 3-25
Infrared radiation, 1-16, 2-9
Insulated adjustment tool, 3-24
International Standards Organization (ISO), 1-11, 3-37
Interruption, power, 2-3

Jack, 3-24
Keyway, 3-3
Keyway limit pin, 3-9, 3-35, 3-36
Lamp, 1-12, 1-13, 1-17, 3-16, 3-23, 3-25, 3-26, 3-27, 3-32, 3-35
Lamp contacts, 3-35
Lamp socket, 3-16, 3-27
Latches, 1-14, 3-8, 3-11
Lens, diffusion, 1-12, 1-13, 1-16, 2-9, 3-9, 3-11, 3-27, 3-28, 3-32, 3-35
Lighthead, 1-11, 1-12, 1-14, 1-15, 2-1, 2-2, 2-10, 3-8, 3-9, 3-11, 3-16, 3-17, 3-18, 3-19, 3-20, 3-21, 3-27, 3-28, 3-33, 3-35, 3-36
Lighthead cable, 3-9, 3-16, 3-24, 3-25, 3-29, 3-31, 3-32, 3-33, 3-34, 3-36
Lighthead cover, 3-19, 3-25, 3-32, 3-35
Lighthead housing, 3-19, 3-25, 3-32
Lighthead pivot, 1-11, 3-16, 3-19, 3-35,
Linear power supply, 1-16, 1-17, 3-24
Locknut, 3-19
Lockwasher, 3-32
Lubrication, 3-10
Lug
  Socket, 3-35
  Terminal, 3-9, 3-24
Lux, 3-25
Manufacturing variations, 1-14
Medical materiel complaints, 1-9
Metal upper access cover, 3-33
Meter, foot-candle, 3-25
Model differences, 1-14
Model number, 1-1
Molded foam, 3-8
Mounting post, 3-33
National stock number (NSN), 1-13
Needle-nose pliers, 3-31, 3-34, 3-35
Nomenclature, cross-reference, 1-8
Nuts, 3-32, 3-35

Pad, foam, 3-9, 3-36
Phillips screw, 3-9, 3-20, 3-24, 3-28, 3-29, 3-31, 3-32, 3-33, 3-34, 3-35
Pin
  Axle, 3-8, 3-9, 3-11, 3-36
  Groove, 3-33
  Keyway, 3-9, 3-35, 3-36
  Pivot, 3-35
  Shoulder, 3-33
  Yoke, 3-20, 3-34
Pivot, lighthead, 3-16, 3-19, 3-35
Pivot pin, 3-35
Pivots, 1-11, 3-16, 3-19, 3-35
Plastic lower access cover, 3-33
Plate, heat dissipation, 3-32, 3-35
Pliers
  Needle-nose, 3-31, 3-34, 3-35
  Retaining ring, 3-33
Pointed star screw, 3-19, 3-25, 3-32, 3-35
Post, mounting, 3-33
Post, support, 1-11, 1-12, 1-14, 3-8, 3-9, 3-11, 3-22, 3-36
Potentiometer, 3-24
Power cable, 3-8, 3-11, 3-15, 3-16, 3-24, 3-25, 2-1, 2-5, 2-12, 3-27, 3-28, 3-29, 3-31, 3-32, 3-33, 3-34, 3-36
Power supply, 2-3, 3-1, 3-16, 3-17, 3-23, 3-24, 4-9
  Linear, 1-16, 1-17, 3-24
  Switching, 1-11, 1-17, 3-24
Preventive maintenance checks and services (PMCS), 1-5, 2-1, 2-11, 3-11, 3-12
Printed circuit board (PCB), 3-1, 3-16, 3-17, 3-29, 4-9
Purpose, 1-1
Quality assurance, 1-7
Quality control, 1-7
Quick-fit connector, 3-31, 3-34, 3-35
Radiation, 1-16
Radius, 3-25
Records, 1-3
Reflector, 1-12, 1-13, 1-16, 3-32
Repair parts, 3-5, 4-5

Reports, 1-3, 1-9
Retaining clips, 3-28
Retaining ring, 3-33
  Electrical contact, 3-35
  Pliers, 3-33
Retaining strap, 2-9, 3-9, 3-27, 3-28, 3-32, 3-35
Rocker switch, 2-1, 2-2, 3-16, 3-19, 3-20, 3-25, 3-27, 3-28, 3-29, 3-31, 3-32, 3-33, 3-34, 3-35
Rocker switch cover, 3-20, 3-21, 3-22, 3-31, 3-34, 3-35
Safety, 1-15, 3-27
Scope, 1-1
Screw
  Focus, 3-25, 3-35
  Friction adjustment, 3-21
  Green, slotted, 3-32, 3-35
  Phillips, 3-9, 3-20, 3-24, 3-28, 3-29, 3-31, 3-32, 3-33, 3-34, 3-35
  Pointed star, 3-19, 3-25, 3-32, 3-35
  Set, 3-20, 3-34
  Thumbscrew, 2-9, 3-9, 3-27, 3-28, 3-32, 3-35
Screwdriver, 3-35
Sealing compound bead, 3-20, 3-34
Set screw, 3-20, 3-34
Shadows, 1-1
Shipment, 1-6, 3-37
Shoulder pin, 3-33
Shutdown procedures, 2-2
Sleeve, wiring, 3-32, 3-35
Socket, lamp, 3-16, 3-27
Special tools, 3-6, 4-6
Spring
  Compression, 3-27, 3-28
  Contact, 3-35
  Gas, 3-21, 3-33
  Washer, 3-34
Spring-loaded pressure locking balls, 3-28
Start-up procedures, 2-1
Steam, 2-10
Sterilizing, 2-10, 3-36

Storage, 1-5, 1-6, 3-36
Storing/shipping chest, 1-11, 1-13, 1-14, 3-8, 3-11, 3-36
Strap, retaining, 2-9, 3-9, 3-27, 3-28, 3-32, 3-35
Support post, 1-11, 1-12, 1-14, 3-8, 3-9, 3-11, 3-22, 3-36
Surgical table, 2-1, 2-6
Switch housing, 3-31
Switching power supply, 1-11, 1-17, 3-24

Tabulated data, 1-13
Terminal
  Base, 3-31, 3-34
  Lug, 3-9, 3-24
  Rocker switch base, 3-31, 3-34
Terms, explanation, 1-2
Test equipment, 3-2, 4-2
Threading wire, 3-35
Thumbscrew, 2-9, 3-9, 3-27, 3-28, 3-32, 3-35
Tool, drift pin punch, 3-33
Tools, 3-2, 4-2
Treatment table, 1-15, 2-1, 2-6
Tungsten-halogen lamp, 1-12, 1-13, 1-17, 3-16, 3-23, 3-25, 3-26, 3-27, 3-32, 3-35

Ultraviolet wavelengths, 1-16, 2-9
Unpacking, 3-8

Valve, breather, 1-13
Variations, manufacturing, 1-14
Vehicle battery, 2-12
Visible radiation, 1-16
Voltage, 1-11, 1-13
Voltmeter, 3-24

Warranty, 1-10
Washer
  Lock, 3-32
  Plain, 3-34
  Spring, 3-34
Water, 2-7, 3-27
Wattage, 1-13
Weight, 1-13

Wheels, 1-11, 1-12, 1-13, 3-8, 3-9, 3-11, 3-36
Wire, attachment, 3-8, 3-9, 3-24, 3-29, 3-36
Wire, grounding, 3-32, 3-35
Wire tips, 3-35
Wire, threading, 3-35
Wiring, electrical color-coded, 3-31, 3-34, 3-35
Wiring sleeve, 3-32, 3-35
Wrench, 3-20

Yoke
- Gasket, 3-35
- Housing, 3-31
- Lighthead, 2-1, 2-2, 3-19, 3-20, 3-21, 3-22, 3-25, 3-27, 3-28, 3-31, 3-29, 3-31, 3-32, 3-33
- Pin, 3-20, 3-34
- Rotation stop, 3-34

RECOMMENDED CHANGES TO EQUIPMENT TECHNICAL PUBLICATIONS

SOMETHING WRONG WITH THIS PUBLICATION?

FROM (PRINT YOUR UNIT'S COMPLETE ADDRESS)
Cdr, USABBDD
Maintenance Shop
Frederick, MD 21702

DATE SENT
20 Mar 90

PUBLICATION NUMBER	PUBLICATION DATE	PUBLICATION TITLE
TM 8-6530-010-24&P	6 FEB 88	Light, Surgical, Field Model 2410MB

BE EXACT. . PIN-POINT WHERE IT IS

PAGE NO	PARA-GRAPH	FIGURE NO	TABLE NO	IN THIS SPACE TELL WHAT IS WRONG AND WHAT SHOULD BE DONE ABOUT IT:
2-7	2-4			Change electrical cable to electrical assembly. REASON: Corrects nomenclature.
E-8		E-2		Reverse call-out numbers 3 and 7. REASON: Correctly identifies part.

SAMPLE

PRINTED NAME, GRADE OR TITLE, AND TELEPHONE NUMBER
JOHN DOE, Maintenance Supervisor
DSN 343-XXXX

SIGN HERE
John Doe

DA FORM 1 JUL 79 2028-2 PREVIOUS EDITIONS ARE OBSOLETE.

☆U.S. Government Printing Office: 1986—491-003/50523

P.S.--IF YOUR OUTFIT WANTS TO KNOW ABOUT YOUR RECOMMENDATION MAKE A CARBON COPY OF THIS AND GIVE IT TO YOUR HEADQUARTERS

CUT ALONG PERFORATED LINE

RECOMMENDED CHANGES TO EQUIPMENT TECHNICAL PUBLICATIONS

SOMETHING WRONG WITH THIS PUBLICATION?

FROM: (PRINT YOUR UNIT'S COMPLETE ADDRESS)

DATE SENT

PUBLICATION NUMBER	PUBLICATION DATE	PUBLICATION TITLE
TM 8-6530-010-24&P		Light, Surgical, Field Model 2410MB

BE EXACT. . PIN-POINT WHERE IT IS

PAGE NO	PARA-GRAPH	FIGURE NO	TABLE NO

IN THIS SPACE TELL WHAT IS WRONG AND WHAT SHOULD BE DONE ABOUT IT:

PRINTED NAME, GRADE OR TITLE, AND TELEPHONE NUMBER

SIGN HERE:

CUT ALONG PERFORATED LINE

DA FORM 1 JUL 79 2028-2 PREVIOUS EDITIONS ARE OBSOLETE.

☆U.S. Government Printing Office: 1986—491-003/50523

P.S.--IF YOUR OUTFIT WANTS TO KNOW ABOUT YOUR RECOMMENDATION MAKE A CARBON COPY OF THIS AND GIVE IT TO YOUR HEADQUARTERS.

REVERSE OF DA FORM 2028-2

CUT ALONG PERFORATED LINE

FILL IN YOUR UNIT'S ADDRESS

FOLD BACK

DEPARTMENT OF THE ARMY

POSTAGE AND FEES PAID
DEPARTMENT OF THE ARMY
DOD 314

U.S. MAIL

OFFICIAL BUSINESS

Commander
U.S. Army Medical Materiel Agency
ATTN: SGMMA-M
Frederick, MD 21702-5001

RECOMMENDED CHANGES TO EQUIPMENT TECHNICAL PUBLICATIONS

SOMETHING WRONG WITH THIS PUBLICATION?

FROM: (PRINT YOUR UNIT'S COMPLETE ADDRESS)

DATE SENT

PUBLICATION NUMBER	PUBLICATION DATE	PUBLICATION TITLE
TM 8-6530-010-24&P		Light, Surgical, Field Model 2410MB

BE EXACT. . PIN-POINT WHERE IT IS

PAGE NO.	PARA-GRAPH	FIGURE NO	TABLE NO

IN THIS SPACE TELL WHAT IS WRONG AND WHAT SHOULD BE DONE ABOUT IT:

PRINTED NAME, GRADE OR TITLE, AND TELEPHONE NUMBER

SIGN HERE:

DA FORM 1 JUL 79 2028-2 PREVIOUS EDITIONS ARE OBSOLETE.

☆U.S. Government Printing Office: 1986—491-003/50523

P.S.--IF YOUR OUTFIT WANTS TO KNOW ABOUT YOUR RECOMMENDATION MAKE A CARBON COPY OF THIS AND GIVE IT TO YOUR HEADQUARTERS.

CUT ALONG PERFORATED LINE

REVERSE OF DA FORM 2028-2

CUT ALONG PERFORATED LINE

FILL IN YOUR UNIT'S ADDRESS

FOLD BACK

DEPARTMENT OF THE ARMY

POSTAGE AND FEES PAID
DEPARTMENT OF THE ARMY
DOD 314

U.S. MAIL

OFFICIAL BUSINESS

Commander
U.S. Army Medical Materiel Agency
ATTN: SGMMA-M
Frederick, MD 21702-5001

RECOMMENDED CHANGES TO EQUIPMENT TECHNICAL PUBLICATIONS

SOMETHING WRONG WITH THIS PUBLICATION?

FROM: (PRINT YOUR UNIT'S COMPLETE ADDRESS)

DATE SENT

PUBLICATION NUMBER	PUBLICATION DATE	PUBLICATION TITLE
TM 8-6530-010-24&P		Light, Surgical, Field Model 2410MB

BE EXACT. . PIN-POINT WHERE IT IS

PAGE NO.	PARA-GRAPH	FIGURE NO	TABLE NO

IN THIS SPACE TELL WHAT IS WRONG AND WHAT SHOULD BE DONE ABOUT IT:

PRINTED NAME, GRADE OR TITLE, AND TELEPHONE NUMBER

SIGN HERE.

CUT ALONG PERFORATED LINE

DA FORM 1 JUL 79 2028-2 PREVIOUS EDITIONS ARE OBSOLETE.

☆U.S. Government Printing Office: 1986—491-003/50523

P.S.--IF YOUR OUTFIT WANTS TO KNOW ABOUT YOUR RECOMMENDATION MAKE A CARBON COPY OF THIS AND GIVE IT TO YOUR HEADQUARTERS

REVERSE OF DA FORM 2028-2

CUT ALONG PERFORATED LINE

FILL IN YOUR UNIT'S ADDRESS

FOLD BACK

DEPARTMENT OF THE ARMY

POSTAGE AND FEES PAID
DEPARTMENT OF THE ARMY
DOD 314

U.S. MAIL

OFFICIAL BUSINESS

Commander
U.S. Army Medical Materiel Agency
ATTN: SGMMA-M
Frederick, MD 21702-5001

By Order of the Secretary of the Army:

GORDON R. SULLIVAN
General, United States Army
Chief of Staff

Official: Milton H. Hamilton

MILTON H. HAMILTON
Administrative Assistant to the
Secretary of the Army

Distribution:

To be distributed in accordance with DA Form 12-34-E, block 4486, requirements for TM 8-6530-010-24&P.

*U.S. G.P.O.:1993-342-024:60159

METRIC SYSTEM CONVERSIONS

CHANGE	TO	MULTIPLY	CHANGE	TO	MULTIPLY
inches	centimeters	2.540	centimeters	inches	.394
feet	meters	.305	meters	feet	3.280
yards	meters	.914	meters	yards	1.094
sq inches	sq centimeters	6.451	sq centimeters	sq inches	.155
sq feet	sq meters	.093	sq meters	sq feet	10.764
cubic feet	cubic meters	.028	cubic meters	cubic feet	35.315
fluid ounces	milliliters	29.573	milliliters	fluid ounces	.034
pints	liters	.473	liters	pints	2.113
quarts	liters	.946	liters	quarts	1.057
gallons	liters	3.785	liters	gallons	.264
ounces	grams	28.349	grams	ounces	.035
pounds	kilograms	.454	kilograms	pounds	2.205

TEMPERATURE CONVERSION

Degrees Fahrenheit to Degrees Celsius: (°F - 32) X .5555 = °C

Degrees Celsius to Degrees Fahrenheit: (°C X 1.8) + 32 = °F

WEIGHTS

1 gram = 10 decigrams = .035 ounce

1 dekagram = 10 grams = .35 ounce

1 hectogram = 10 dekagrams = 3.52 ounces

1 kilogram = 10 hectograms = 2.2 pounds

LINEAR MEASURE

1 centimeter = 10 millimeters = .39 inch

1 decimeter = 10 centimeters = 3.94 inches

1 meter = 10 decimeters = 39.37 inches

CUBIC MEASURE

1 cu centimeter = 1000 cu millimeters = .06 cu inch

1 cu decimeter = 1000 cu centimeters = 61.02 cu inches

1 cu meter = 1000 cu decimeters = 35.31 cu feet

LIQUID MEASURE

1 centiliter = 10 milliters = .34 fluid ounce

1 deciliter = 10 centiliters = 3.38 fluid ounces

1 liter = 10 deciliters = 33.81 fluid ounces