TECHNICAL MANUAL

UNIT, DIRECT SUPPORT, AND GENERAL SUPPORT MAINTENANCE MANUAL

(INCLUDING REPAIR PARTS AND SPECIAL TOOLS LIST)

CLEANER, ULTRASONIC, MOBILE

6530-01-254-4135

APPROVED FOR PUBLIC RELEASE; DISTRIBUTION IS UNLIMITED

HEADQUARTERS, DEPARTMENT OF THE ARMY

1991

SAFETY STEPS TO FOLLOW IF SOMEONE IS THE VICTIM OF ELECTRICAL SHOCK

DO NOT TRY TO PULL OR GRAB THE INDIVIDUAL

IF POSSIBLE, TURN OFF THE ELECTRICAL POWER

IF YOU CANNOT TURN OFF THE ELECTRICAL POWER, PULL, PUSH, OR LIFT THE PERSON TO SAFETY USING A DRY WOODEN POLE OR A DRY ROPE OR SOME OTHER INSULATING MATERIAL

SEND FOR HELP AS SOON AS POSSIBLE

AFTER THE INJURED PERSON IS FREE OF CONTACT WITH THE SOURCE OF ELECTRICAL SHOCK, MOVE THE PERSON A SHORT DISTANCE AWAY AND IMMEDIATELY START ARTIFICIAL RESUSCITATION

Throughout this manual are WARNINGS, CAUTIONS, and NOTES. Please take time to read these. They are there to protect you and the equipment.

WARNING

Procedures which must be observed to avoid personal injury, and even loss of life.

CAUTION

Procedures which must be observed to avoid damage to equipment, destruction of equipment, or long-term health hazards.

NOTE

Essential information that should be remembered.

TECHNICAL MANUAL

NO. 8-6530-005-24&P

HEADQUARTERS
DEPARTMENT OF THE ARMY
WASHINGTON, DC

UNIT, DIRECT SUPPORT, AND GENERAL SUPPORT MAINTENANCE MANUAL (INCLUDING REPAIR PARTS AND SPECIAL TOOLS LIST) CLEANER, ULTRASONIC, MOBILE 6530-01-254-4135

You can help improve this manual. If you find any mistakes or if you know a way to improve procedures, please let us know. Mail your memorandum, DA Form 2028 (Recommended Changes to Publications and Blank Forms), or DA Form 2028-2 (Recommended Changes to Equipment Technical Publications) located in the back of this manual, to: Commander, U.S. Army Medical Materiel Agency, ATTN: SGMMA-M, Frederick, MD 21702-5001. A reply will be furnished directly to you.

Approved for public release; distribution is unlimited.

TABLE OF CONTENTS

			Page
		HOW TO USE THIS MANUAL	iv
CHAPTER	1.	INTRODUCTION	
Section	I.	General Information	1-1
	II.	Equipment Description and Data	1-2
	III.	Principles of Operation	1-4
CHAPTER	2.	OPERATING INSTRUCTIONS	
Section	I.	Operating Procedures	2-1
	II.	Operational Factors	2-2
	III.	Operation of Auxiliary Equipment	2-3
	IV.	Operation Under Unusual Conditions	2-3
CHAPTER	3.	UNIT LEVEL MAINTENANCE	
Section	I.	General Information	3-1
	II.	Service Upon Receipt of Equipment	3-1
	III.	Lubrication Instructions	3-3

Section	IV.	Preventive Maintenance Checks and Services	3-3
	V.	Functional Testing	3-4
	VI.	Troubleshooting	3-4
	VII.	Maintenance Instructions	3-7
	VIII.	Storage and Shipment Procedures	3-11
CHAPTER	4.	DIRECT SUPPORT AND GENERAL SUPPORT MAINTENANCE	
Section	I.	General Information	4-1
	II.	Power Module	4-1
	III.	Transducers	4-9
APPENDIX	A.	REFERENCES	A-1
	B.	MAINTENANCE ALLOCATION CHART	B-1
	C.	COMPONENTS OF END ITEM AND BASIC ISSUE ITEMS LIST	C-1
	D.	EXPENDABLE AND DURABLE SUPPLIES AND MATERIALS LIST	D-1
	E.	REPAIR PARTS AND SPECIAL TOOLS LIST	E-1
GLOSSARY			GLOSSARY-1
INDEX			INDEX-1

LIST OF ILLUSTRATIONS

Figure No.	*Title*	*Page*
1-1	Front data plate	1-3
1-2	Rear data plate	1-4
3-1	Electrical schematic	3-6
3-2	Wiring harness	3-6
4-1	Power module wiring diagram	4-1
4-2	Power module assembly	4-2
4-3	Power module oscilloscope displays	4-3
4-4	Test instrumentation schematic	4-4
4-5	Output open-circuited	4-4
4-6	Damaged transducer(s) or fractured transducer bond(s)	4-5
4-7	Mismatched transistors Q1 and Q2	4-5
4-8	Capacitor C2 open	4-6
4-9	Resistors R3 or R4 open	4-6
4-10	Output transformer primary coil open	4-7
4-11	Output transformer secondary coil open	4-7
4-12	Transistor and diode troubleshooting	4-8
E-1	Mechanical components	E-2
E-2	Electrical components	E-4
E-3	Timer	E-6
E-4	EMI assembly	E-8
E-5	Transformer	E-10
E-6	Fan assemblies	E-12
E-7	Ultrasonic tank	E-14
E-8	Transducer	E-16
E-9	Power module	E-18
E-10	Wiring harness	E-20

LIST OF TABLES

Number	Title	Page
1-1	Nomenclature cross-reference list	1-2
1-2	Dimensions	1-3
1-3	Material specifications	1-3
1-4	Miscellaneous characteristics	1-3
3-1	Electrical connections	3-2
3-2	Preventive maintenance checks and services	3-4
3-3	General troubleshooting	3-5

HOW TO USE THIS MANUAL

☐ This manual provides all the information needed to understand the capabilities, functions, and characteristics of the ultrasonic cleaner. It describes how to set up, operate, test, repair, and perform verification functions. You must familiarize yourself with the entire manual before operating or beginning a maintenance task.

☐ The manual is arranged by chapters, sections, and paragraphs followed by appendixes, a glossary, an index, and DA Forms 2028-2. Use the table of contents to help locate the chapter or section for the general subject area needed. The index will help locate more specific subjects.

☐ Multiple figures and tables are provided for your ease in using this manual. Words that are both capitalized and in quotation marks are names of components or words that you will actually see on the equipment.

☐ Chapter 3 provides a systematic method of inspecting and servicing the ultrasonic cleaner. In this way, small defects can be detected early before they become a major problem causing the unit to fail to complete its mission. Make a habit of doing the checks and services in the same order each time and anything wrong will be detected quickly.

☐ Specific direct support and general support maintenance instructions are included. Only perform maintenance functions specified in the maintenance allocation chart for your level of maintenance. Maintenance functions specified for higher levels of maintenance frequently require additional training; test, measurement, and diagnostic equipment; or tools.

CHAPTER 1

INTRODUCTION

Section I. GENERAL INFORMATION

1-1. Scope.

This manual describes the ultrasonic cleaner; provides maintenance personnel with equipment technical data and installation procedures; and provides operational and maintenance functions, services, and actions. Additional information follows:

a. Type of manual. Unit, direct support (DS), and general support (GS) maintenance (including repair parts and special tools list).

b. Model number and equipment name. MSC-900T-11/21, Cleaner, Ultrasonic, Mobile.

c. Purpose of equipment. Cleans a wide range of medical devices and material that cannot be effectively and efficiently cleaned with conventional cleaning methods.

1-2. Explanation of abbreviations and terms.

Special or unique abbreviations, acronyms, and terms used within this manual are explained in the glossary.

1-3. Maintenance forms, records, and reports.

TB 38-750-2 prescribes forms, records, reports, and procedures.

1-4. Destruction of Army materiel to prevent enemy use.

AR 40-61 contains instructions for destruction and disposal of Army medical materiel. Also, the SB 8-75 series publications provide periodic information and/or instructions on the disposal of medical materiel that are hazardous.

1-5. Administrative storage.

a. Placement of the ultrasonic cleaner in administrative storage should be for short periods of time when a shortage of maintenance effort exists. Items should be in mission readiness condition within 24 hours or within the time factors as determined by the directing authority. During the storage period, appropriate maintenance records will be kept.

b. Army equipment placed in administrative storage will have preventive maintenance performed in accordance with the preventive maintenance checks and services (PMCS) listed in table 3-2 before storage. When equipment is removed from storage, PMCS will be performed to assure operational readiness.

c. Inside storage is preferred for equipment selected for administrative storage.

1-6. Preparation for storage or shipment.

Refer to chapter 3, section VIII for the procedures used to prepare the ultrasonic cleaner for storage or shipment.

1-7. Quality assurance or quality control (QA or QC).

TB 740-10/DLAM 4155.5/AFR 67-43 contains QA or QC requirements and procedures.

1-8. Nomenclature cross-reference list.

Table 1-1 identifies official versus commonly used nomenclatures.

Table 1-1. Nomenclature cross-reference list.

Common name	Official nomenclature
Ultrasonic cleaner	Cleaner, ultrasonic, mobile
Drain valve	Cock, poppet, drain
Basket	Basket, dipping-draining
Printed circuit board (PCB)	Printed wiring board
Transducer	Projector, sonar
Transformer	Power transformer
Caster assembly	Caster, swivel, w/brake

1-9. Reporting and processing medical materiel complaints and/or quality improvement reports.

AR 40-61 prescribes procedures for submitting medical materiel complaints and/or quality improvement reports for the ultrasonic cleaner.

1-10. Warranty information.

A warranty is not applicable.

Section II. EQUIPMENT DESCRIPTION AND DATA

1-11. Equipment characteristics, capabilities, and features.

a. The ultrasonic cleaner is a compact, mobile, and self-contained unit that uses ultrasonic energy to remove biological debris from surgical and laboratory devices while they are soaking in a cleaning solution.

b. The unit has several advantages over conventional methods: it cleans hard-to-reach crevices; it is less abrasive to device surfaces; and it saves labor.

c. The ultrasonic cleaner has lockable casters for easy movement and permanent placement. Additionally, the unit is capable of operation on multiple voltages and frequencies.

1-12. Description of significant components.

a. Cabinet. This component is constructed of type 304, polished stainless steel. A removable rear service panel provides easy access to internal components. Louvers are provided on the front of the cabinet and the rear service panel for ventilation.

b. Tank. The tank is constructed of type 304, polished stainless steel. A 1-inch drain pipe is provided for the external connection of a drain valve.

c. Ultrasonic generator. This component consists of 3 ultrasonic plug-in power modules and 18 lead zirconate titanite (LZT) transducers bonded to the tank bottom.

d. Control. The control for operation of the ultrasonic cleaner consists of a dial-type timer assembly with an integral power switch. An indicator lamp is also provided on the cabinet.

1-13. Tabulated data.

The tabulated data provides the dimensions, material specifications, electrical characteristics, and miscellaneous data for the ultrasonic cleaner. This data also includes the location and contents of all data plates.

a. Dimensions, specifications, and characteristics. Tables 1-2 through 1-4 provide a broad range of dimensions, material specifications, and miscellaneous characteristics.

Table 1-2. Dimensions.

Cabinet	
Length	23 7/8 in.
Width	18 1/8 in.
Height	31 in.
Tank	
Length	21 1/2 in.
Width	15 3/4 in.
Depth	12 in.
Basket	
Length	18 1/2 in.
Width	13 1/2 in.
Depth	4 in.
Electrical power cable	6 ft.
Hose	5 ft.
Casters	5 in. dia.

Table 1-3. Material specifications.

Cabinet (base)	16 gauge, type 304, stainless steel
Cabinet (sides)	18 gauge, type 304, stainless steel
Tank	18 gauge, type 304, stainless steel

Table 1-4. Miscellaneous characteristics.

Electrical requirement	115 V, 50/60 Hz, 9 amps or 230 V, 50/60 Hz, 4.5 amps
Ultrasonic generator	40 kHz, 900 Watts
Fuse (115 V operation)	12 Amp
(230 V operation)	6 Amp
Timer	0 to 60 min.
Tank capacity	17.5 gal.

b. Identification, instruction, and warning plates, decals, or markings. Figures 1-1 and 1-2 provide information shown on data plates located on the front and rear of the unit.

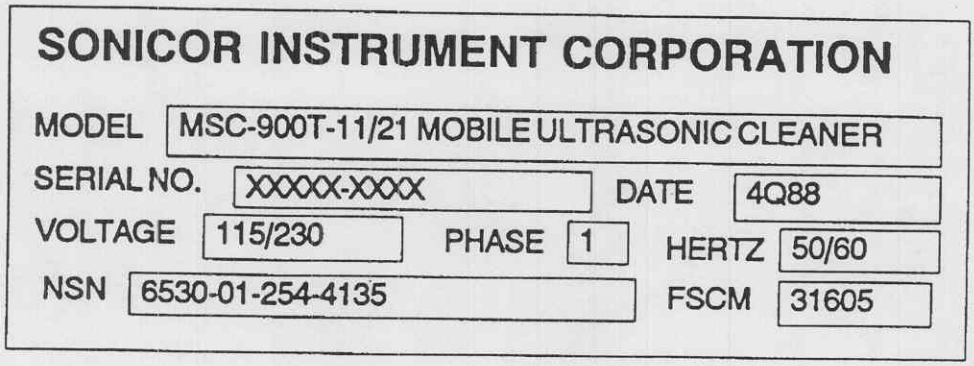

Figure 1-1. Front data plate.

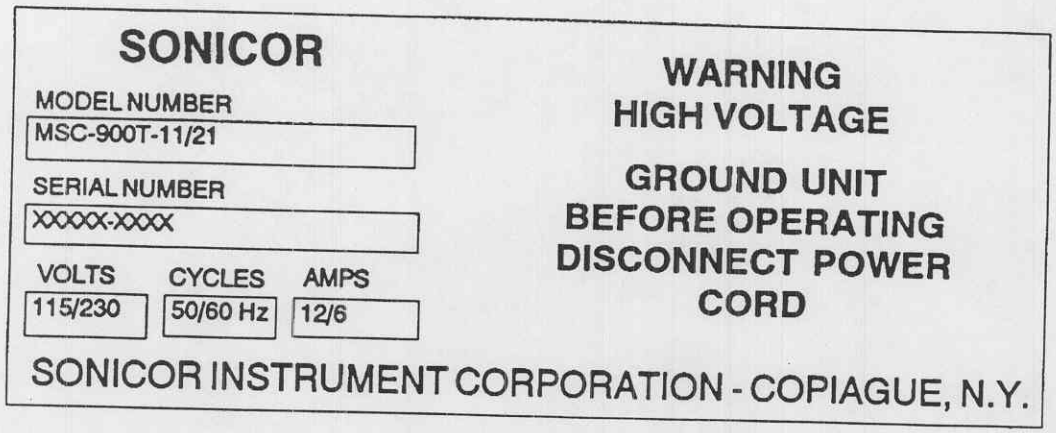

Figure 1-2. Rear data plate.

1-14. Model differences.

Model differences are not applicable since this manual covers a single model. However, design changes in assemblies, subassemblies, or components occur periodically. Information on such engineering changes will be published in supply bulletins and subsequent changes to this manual.

1-15. Safety, care, and handling.

a. Observe each WARNING, CAUTION, and NOTE in this manual. The use of electricity and hot water may be hazardous to medical personnel.

b. Assure that ventilation louvers are not obstructed.

c. Follow the manufacturer's instructions for the use of chemical cleaning solutions. High concentrations may inhibit ultrasonic activity or corrode the equipment.

Section III. PRINCIPLES OF OPERATION

1-16. Control functions.

The ultrasonic cleaner operation is controlled by an interval timer with an integral electrical power switch. The rotary knob of the timer provides from 0 (off) to 60 minutes of operation as set on the dial. A lamp is illuminated when the timer is energized.

1-17. Basic ultrasonic sound wave generation.

a. The ultrasonic cleaner consists of an electronic ultrasound generator, ultrasonic transducers, and a tank. The ultrasound generator converts electrical energy into electronic signals which are transferred to the ultrasonic transducers. In turn, the transducers generate ultrahigh frequency sound waves.

b. The ultrasonic transducers are bonded to the bottom of the tank and transmit the ultrasonic energy through the cleaning solution to solid objects in the tank. Solid objects will now vibrate.

c. The vibration produces a "scrubbing" action at the interface between an object's dirty surface and the cleaning solution. In addition, ultrasound induces cavitation (the formation of partial vacuums in a liquid), which causes bubbles to form when the low-pressure phase of the wave is lower than the liquid's vapor pressure. When the high-pressure phase of the cycle begins, the bubbles implode, providing additional cleaning action. This latter action allows the cleaning of recesses in intricately shaped objects.

1-18. Cleaning solutions.

a. Cleaning solutions, either detergents or solvents, are added to warm water in the tank depending on the materials.

b. Acids or strong solvents required for cleaning specific materials are typically placed into beakers with the materials and then placed in the tank filled with water.

CHAPTER 2

OPERATING INSTRUCTIONS

Section I. OPERATING PROCEDURES

2-1. Initial procedures.

Detailed procedures for unpacking, assembling, and preparing the ultrasonic cleaner for operation are provided in paragraph 3-7. Procedures for shutdown are provided in paragraph 2-1b.

a. Start-up procedures.

(1) Unlock the four caster assemblies.

(2) Move the ultrasonic cleaner to its operating position allowing at least 6 inches clearance from another equipment item or a wall to allow for adequate air circulation.

(3) Lock at least two caster assemblies to prevent further movement.

(4) Turn the timer knob to 0 (off).

(5) Contact a medical equipment repairer prior to connecting the ultrasonic cleaner to electrical power.

WARNING

Do not operate the ultrasonic cleaner unless proper grounding is verified. Serious injury or death by electrocution can result.

CAUTION

Do not operate the ultrasonic cleaner unless the power module shipping brackets have been removed by a medical equipment repairer. Damage to the unit can result.

(6) Close the drain valve.

(7) Fill the tank with 14 gallons of warm water.

CAUTION

Never operate the ultrasonic cleaner without a minimum liquid depth of 6 inches to prevent damage to the unit.

(8) Add cleaning solution to the tank as recommended by the manufacturer of the cleaning solution.

(9) Turn the timer knob to approximately 15 minutes. The ultrasonic cleaner will operate and the indicator lamp will light.

NOTE

A buzzing and/or a squealing sound will be emitted from the tank signifying the presence of ultrasonic energy. The sounds will vary throughout the operation of the ultrasonic cleaner. In addition, ripples will appear on the surface of the cleaning solution. These conditions are normal. The sound is reduced when material is in the tank. A squealing sound will also result from violent movement of the cleaning solution when lowering or raising the basket.

The solution will undergo a process called degassing which is the release of trapped air from the cleaning solution. This process should take between 10 to 15 minutes before full ultrasonic efficiency is achieved. Degassing should be performed after each tank filling or when the cleaning solution has been stagnant over a long period of time.

b. Shutdown procedures.

(1) Disconnect the electrical power.

(2) Place the cover on the tank when the cleaning solution will be reused. (If the cleaning solution is not reused proceed to step 3.)

(3) Connect the hose assembly to the drain valve.

(4) Place a container suitable to hold the cleaning solution under the hose assembly.

(5) Open and close the drain valve as required.

(6) Rinse any residue from the tank.

(7) Wipe the entire ultrasonic cleaner with a soft, damp cloth.

(8) Place the cover on the tank. Refer to paragraph 3-24 for storage procedures.

SECTION II. OPERATIONAL FACTORS

2-2. Ultrasonic cleaning factors.

Four factors consisting of time, temperature, chemistry, and concentration determine the best cleaning method for any particular application. An explanation of each factor follows:

a. Time. The cleaning time will depend on the amount, location, and type of soil to be removed. While most surface soils can be instantaneously removed, heavy soils imbedded in the cracks, crevices, pores, and parts that are layered will increase cleaning time. Never overload the basket. Fewer items are cleaned better and faster.

b. Temperature. The temperature of a liquid affects both cavitation quality and the chemical cleaning reaction. Both can usually be improved by increasing the operating temperature of the cleaning solution. However, there is an optimum temperature at which cavitation intensity is the greatest. This optimum temperature varies in liquids according to their properties. Aqueous detergent solutions usually cavitate with optimum intensity within the range of 56° to 89° Celsius (133° to 192° Fahrenheit). Cavitation may diminish at cleaning solution temperatures above 89° Celsius (192° Fahrenheit).

c. Chemistry. The chemistry of the cleaning solution should remove the applicable soils without affecting the items being cleaned and allowing high cavitational intensity.

d. Concentration. The chemical concentration of the cleaning solution is a critical factor in the cleaning process. Use the concentration recommended by the cleaning solution manufacturer.

NOTE

High concentrations of cleaning solution may inhibit ultrasonic activity.

2-3. External material processing procedures.

Materials to be cleaned using ultrasonic energy should be processed as follows:

a. Rinse the material thoroughly using warm water to remove loose or surface soils.

b. Open all jointed items for maximum exposure of joints, jaws, blades, and locks.

c. Position and stack the items in the basket using a crisscross layer pattern with each layer placed in the opposite direction of the previous layer. Place heavy and bulky items on the bottom.

d. Lower the basket into the tank without scratching the walls of the tank.

e. Upon completion of the ultrasonic cleaning cycle, slowly and carefully remove the basket of material.

f. Rinse the cleaned parts with warm to hot water.

g. Repeat the procedures for the next batch or follow the shutdown procedures listed in paragraph 2-1b.

Section III. OPERATION OF AUXILIARY EQUIPMENT

2-4. Operation of auxiliary equipment.

There is no auxiliary equipment supplied with or used with the ultrasonic cleaner.

Section IV. OPERATION UNDER UNUSUAL CONDITIONS

2-5. Operation under unusual conditions.

Operation of the ultrasonic cleaner under unusual conditions, such as in extremely high temperature, may require increased air flow to cool the unit.

CHAPTER 3

UNIT LEVEL MAINTENANCE

Section I. GENERAL INFORMATION

3-1. Overview.

Maintenance functions, both preventive and corrective, that are beyond the scope of the user are assigned to unit level medical equipment repairer personnel. These personnel will perform the majority of maintenance required for the ultrasonic cleaner except for some tasks involving the PCBs, transducers, tank, and cabinet. This chapter provides instructions and information to aid in performing the required tasks.

3-2. Tools and test equipment.

Common tools and test equipment required for maintenance of the ultrasonic cleaner are listed in appendix B, section III of this manual. Refer to your unit's modified table or organization and equipment (MTOE) for authorized items.

3-3. Components of end item and basic issue items.

Components of end item and basic issue items are listed in appendix C, sections II and III of this manual.

3-4. Expendable supplies.

Expendable and durable supplies and materials required for maintenance of the ultrasonic cleaner are listed in appendix D, section II of this manual.

3-5. Repair parts.

Repair parts required for unit level maintenance are listed in appendix E, section II of this manual.

3-6. Special tools.

Special tools required for maintenance of the ultrasonic cleaner are listed in appendix E, section III of this manual.

Section II. SERVICE UPON RECEIPT OF EQUIPMENT

3-7. Inspecting and servicing the unit.

The ultrasonic cleaner will be unpacked, inspected, and serviced as described in the following subparagraphs. Discrepancies must be reported in accordance with the instructions given in AR 40-61.

a. Unpacking the unit.

(1) Turn the ultrasonic cleaner carton onto its side.

(2) Cut the sealing material and open the carton bottom flaps.

(3) Turn the carton back to its upright position.

(4) Lift off the carton. Retain the carton to use as a protective cover during unit movement.

(5) Remove the styrofoam end inserts and plastic wrap. Discard this material.

(6) Remove the tank cover and plastic wrap. Discard the plastic wrap.

(7) Remove the small carton and styrofoam sheets from the tank. Discard the styrofoam sheets.

(8) Open the carton and remove the components. Discard the carton.

(9) Inventory the components using figure E-1 and the listings in appendix C, sections II and III.

b. Servicing the unit.

(1) Carefully turn the ultrasonic cleaner onto its side.

(2) Install the four caster assemblies.

(3) Lock the caster assemblies.

(4) Return the unit to its upright position.

(5) Install the drain valve.

(6) Remove the rear service panel.

(7) Remove the two power module shipping brackets. Place the brackets in a secure location for subsequent use.

CAUTION

Do not operate the ultrasonic cleaner unless the power module shipping brackets have been removed to prevent damage to the unit.

(8) Verify the correct electrical connections on the terminal block inside the rear service panel. Electrical connections are identified in table 3-1. The electrical schematic (fig 3-1) and the wiring harness diagram (fig 3-2) also depict the electrical connections.

WARNING

HIGH VOLTAGE is produced when this unit is in operation. DEATH or severe burns may result if personnel fail to observe safety precautions.

Table 3-1. Electrical connections.

Voltage	Push on Lug Color	Terminal Block Number
115	Red	4
115	Gray	1
230	Red	2
230	Gray	3

NOTE

The ultrasonic cleaner is initially set up for operation on 115 volts. The unit is also initially furnished with a 115-volt electrical connector.

(9) Fill the tank with a minimum of 6 inches of water for testing.

(10) Connect the unit to electrical power.

(11) Turn the timer knob to approximately 15 minutes.

(12) Observe the sound and visual indications of proper operation.

(13) Assure the operation of each ultrasonic power module by observing that each light emitting diode (LED) is glowing.

(14) Drain the tank when the unit automatically turns off.

(15) Replace the rear service panel.

c. Inspecting the unit.

(1) Perform a visual inspection to detect any damage which may have occurred to the ultrasonic cleaner.

(2) Report damage and/or discrepancies in components or operation in accordance with established procedures to the medical supply officer.

Section III. LUBRICATION INSTRUCTIONS

3-8. General.

Lubrication requirements are limited to the two fan assemblies for cooling the ultrasonic generator printed circuit modules and the four caster assemblies.

3-9. Fan lubrication.

The fan motor bushings should be lubricated periodically using a light, general-purpose lubricating oil.

3-10. Caster assembly lubrication.

Periodically the caster bushings should be lightly lubricated. The caster assemblies should also be wiped annually with a light, general-purpose lubricating oil to retard rust and corrosion.

Section IV. PREVENTIVE MAINTENANCE CHECKS AND SERVICES

NOTE

The PMCS chart in this section contains all necessary unit level services for the ultrasonic cleaner.

3-11. General.

a. The ultrasonic cleaner must be inspected and serviced systematically to assure that the unit is ready for operation at all times. Inspection will allow defects to be discovered and corrected before they result in serious damage or failure. Table 3-2 contains a tabulated list of PMCS items to be performed by unit level maintenance personnel.

b. Preventive maintenance is not limited to performing the checks and services listed in the PMCS table. There are things you should do any time you see they need to be done, such as checking for general cleanliness, observing for improper operational indicators, and maintaining the proper quantities of operating supplies.

c. The following is a list of the PMCS table column headings with a description of the information found in each column:

(1) *Item, Column 1.* This column shows the sequence in which to do the PMCS, and is used to identify the equipment area on the Equipment Inspection and Maintenance Worksheet, DA Form 2404.

(2) *Interval, Column 2.* This column shows when each PMCS item is to be serviced. **D** denotes daily; **S** denotes semiannually; and **A** denotes annually.

NOTE

Daily items are only required to be performed when the ultrasonic cleaner is being used for its intended purpose.

When the equipment must be kept in continuous operation, check and service only those items that will not disrupt operation. Perform the complete daily checks and services when the equipment can be shut down.

(3) *Item to be Inspected, Column 3.* This column identifies the general area or specific part to be checked or serviced.

(4) *Procedures, Column 4.* This column explains how to perform the check or service. Deficiencies should be reported.

Table 3-2. Preventive maintenance checks and services.

ITEM	INTERVAL	ITEM TO BE INSPECTED	PROCEDURES
1	D	Cabinet (exterior)	a. Check for loose or missing hardware. Report discrepancies. b. Check louvers for an accumulation of dirt. Clean as required. c. Check for chemical deposits. Clean as required.
2	S	Electrical cable and connector	Inspect the cable and connector for damage or deterioration.
3	S	Fuseholder	a. Disconnect the unit from electrical power. b. Check the fuseholder for tightness.
4	D	Timer (control)	a. Check for smooth rotary movement. b. Check for counterclockwise movement during operation.
5	D	Lamp	Check that the lamp is illuminated during operation.
		WARNING The following checks and services will only be performed by a medical equipment repairer to prevent injury to unqualified personnel or damage to the ultrasonic cleaner.	
6	S	Cabinet interior	a. Disconnect from electrical power. b. Remove cabinet rear service panel. c. Inspect for dirt accumulation. d. Clean as required with a soft brush or vacuum cleaner. e. Visually inspect for damaged components. f. Replace rear service panel.
7	A	Cabinet (exterior)	Clean and protect the unit with stainless steel polish.

3-12. Reporting deficiencies.

If operator personnel discover any problem with the equipment during PMCS that they are unable to correct, it must be reported. Refer to TB 38-750-2 and report the deficiency using the proper forms. Consult with your unit level medical equipment repairer if assistance is required.

Section V. FUNCTIONAL TESTING

3-13. Scope.

This section contains the instructions for functional testing of the ultrasonic cleaner. Perform these tests following the initial receipt and installation of the unit and semiannually thereafter.

a. Preventive maintenance checks and services. Perform the PMCS listed in paragraph 3-11 before performing functional testing.

b. Functional testing. Functional testing is performed by following the procedures in paragraph 2-1.

Section VI. TROUBLESHOOTING

3-14. General.

a. General troubleshooting information for locating and correcting many of the operating malfunctions which may develop in the ultrasonic cleaner are listed in table 3-3. Symptoms are provided for common malfunctions likely to occur. Each symptom is followed by possible causes and corrective actions.

b. This manual cannot list all possible malfunctions. If a malfunction is not listed or is not determined by routine diagnostic procedures, notify your appropriate maintenance support unit.

Table 3-3. General troubleshooting.

SYMPTOM / POSSIBLE CAUSE	CORRECTIVE ACTION
1. UNIT DOES NOT ENERGIZE.	
No electrical power to receptacle.	Check and reset circuit breaker or determine cause for the lack of electrical power.
No electrical power to fuseholder.	Check and repair or replace electrical connector or cable.
No electrical power to electromagnetic interference (EMI) assembly.	Check and replace fuse.
No electrical power to power transformer.	Check and repair or replace EMI assembly.
2. INDICATOR LAMP DOES NOT LIGHT; UNIT OPERATES.	
Lamp burned out.	Replace lampholder.
Loose electrical connections.	Check for loose connections or broken wire and repair.
3. INDICATOR LAMP DOES NOT LIGHT; UNIT DOES NOT OPERATE.	
No electrical power to unit.	Refer to symptom number 1.
Timer control defective.	Repair or replace timer.
Transformer malfunctioning.	Repair transformer circuitry or replace transformer.
4. FANS DO NOT OPERATE; ULTRASONIC ACTIVITY IN TANK.	
No electrical power to fans.	Repair loose or broken wires.
Electrical power to fans.	Repair or replace fan motors.
5. NO ULTRASONIC ACTIVITY IN TANK.	
Power modules defective.	Replace power module(s) with reparable exchange (RX) module(s).
6. LOW ULTRASONIC ACTIVITY IN TANK.	
Cleaning solution not degassed.	Degas solution.
Cleaning solution concentration improper.	Replace cleaning solution.
Cleaning solution operating temperature incorrect.	Adjust solution temperature or replace solution in tank.
Power module(s) failure.	Replace power module(s).
Transducer failures.	Replace power modules and/or transducers.
7. CASTERS DO NOT SWIVEL OR LOCK.	
Lock(s) defective.	Clean caster assemblies, adjust lock mechanism, or replace caster(s).
Caster swivel assemblies defective.	Clean caster assemblies or replace caster(s).

c. An electrical schematic and wiring harness diagram are provided as figures 3-1 and 3-2 for detailed electrical troubleshooting and failure analysis.

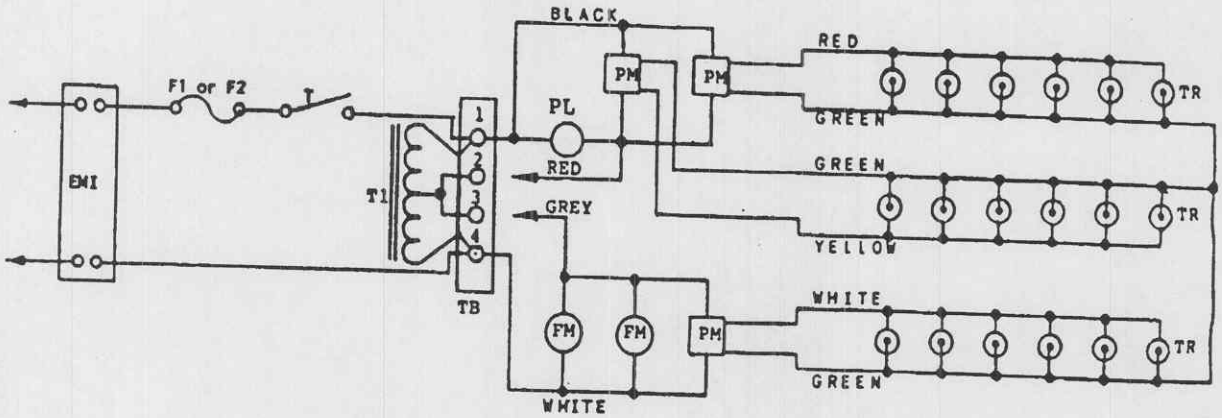

Figure 3-1. Electrical schematic.

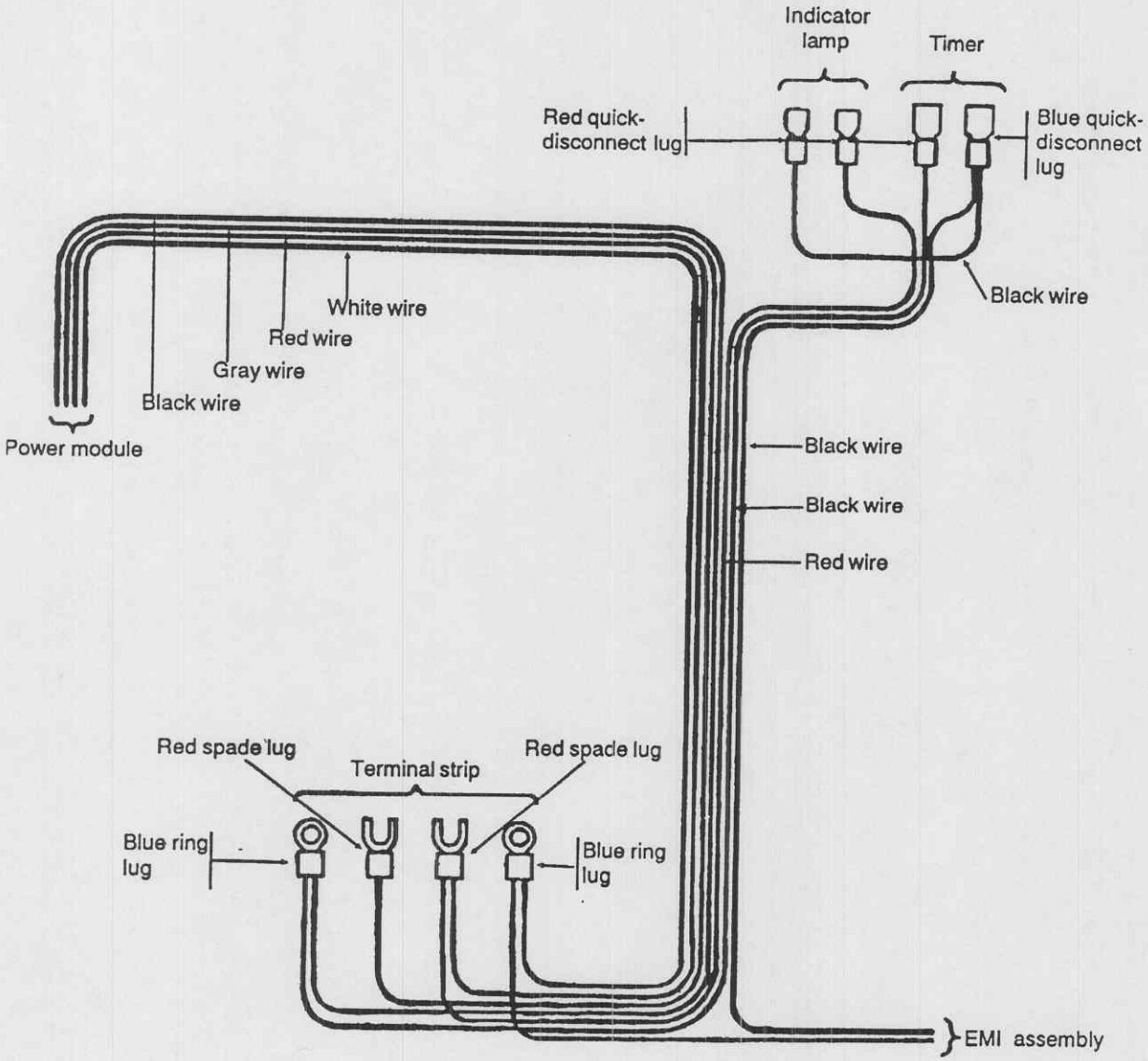

Figure 3-2. Wiring harness.

Section VII. MAINTENANCE INSTRUCTIONS

3-15. General.

This section of the manual contains procedures for the removal of defective modules or components and the subsequent installation of RX or new items.

3-16. Caster assembly replacement.

Refer to figure E-1.

a. Removal.

(1) Disconnect electrical power from the unit.

(2) Drain and dry the tank, if filled.

(3) Turn the unit onto its side or upside down.

(4) Unscrew the caster assembly by grasping the section above the caster and turning it counterclockwise.

NOTE

The caster assembly adapter should not be removed.

b. Installation.

(1) Install a repaired or replacement caster assembly by grasping the section above the caster and turning it clockwise until tight.

(2) Place the unit upright.

3-17. Indicator lamp replacement.

Refer to figure E-2.

a. Removal.

(1) Disconnect electrical power from the unit.

(2) Remove the rear service panel by removing six machine screws.

(3) Unplug the two quick-disconnect lugs (one red and one black wire) from the lampholder.

(4) Depress the four mechanical fasteners on the lampholder and push it outward.

b. Installation.

(1) Insert a new lampholder from the cabinet front by pushing rearward until the four mechanical fasteners are engaged.

(2) Connect the quick-disconnect lugs unplugged in the removal sequence.

(3) Test the replacement action. (Refer to paragraph 2-1.)

(4) Install the rear service panel by replacing the six machine screws.

3-18. Timer replacement.

Refer to figure E-3.

a. Removal.

(1) Disconnect electrical power from the unit.

(2) Remove the rear service panel by removing six machine screws.

(3) Draw a diagram of the timer alignment as viewed inside the cabinet.

(4) Unplug the two quick-disconnect lugs from the rear of the timer. The upper lug (red) has one black wire and the lower lug (blue) has two wires.

(5) Remove the timer knob by gently prying outward.

(6) Remove the timer shaft nut.

(7) Remove the timer dial disk.

(8) Remove the timer from inside the cabinet.

b. Installation.

(1) Insert the replacement timer from inside the cabinet so that the markings are readable from the left to the right. Assure the accurate alignment of the timer by following the diagram prepared in the preceeding removal sequence.

(2) Install the timer dial disk, shaft nut, and knob. Assure that the timer dial disk is properly aligned.

(3) Connect the quick-disconnect lugs unplugged in the removal sequence.

(4) Test the replacement action. (Refer to paragraph 2-1.)

(5) Install the rear service panel by replacing the six machine screws.

3-19. EMI assembly replacement.

Refer to figure E-4.

a. Removal.

(1) Disconnect electrical power from the unit.

(2) Remove the rear service panel by removing six machine screws.

(3) Remove the EMI assembly cover by removing two machine screw nuts.

(4) Prepare a diagram of wire colors, locations, and PCB orientation.

(5) Remove the machine screw holding the green ground wire to the EMI assembly.

(6) Unsolder the three wires from the front of the EMI assembly.

(7) Remove the two machine screws and unmount the EMI assembly.

(8) Unsolder the black wire fastened on the rear of the EMI assembly.

b. Installation.

NOTE

Follow the diagram prepared in the preceding removal sequence.

(1) Solder the black wire from the fuseholder to the rear of the EMI assembly.

(2) Mount the EMI assembly with two machine screw nuts.

(3) Solder three wires to the front of the EMI assembly.

(4) Install the green ground wire using the machine screw.

(5) Mount the EMI assembly cover and replace the two machine screw nuts.

(6) Test the replacement action. (Refer to paragraph 2-1.)

(7) Install the rear service panel by replacing the six machine screws.

3-20. Transformer replacement.

Refer to figure E-5.

a. Removal.

(1) Disconnect electrical power from the unit.

(2) Remove the rear service panel by removing six machine screws.

(3) Prepare a diagram of wire colors and connections from the transformer to the terminal strip.

(4) Remove the three machine screws fastening the transformer wires to the terminal strip.

(5) Remove the four machine screw nuts fastening the transformer to the cabinet.

(6) Lift the transformer above the machine screws fastened to the cabinet and remove the transformer.

b. Installation.

(1) Install the replacement transformer by placing it over the four machine screws.

(2) Replace the four machine screw nuts.

NOTE

Follow the diagram prepared in the preceding removal sequence.

(3) Install the transformer wires on the terminal strip by replacing the three machine screws.

(4) Test the replacement action. (Refer to paragraph 2-1.)

(5) Install the rear service panel by replacing the six machine screws.

3-21. PCB replacement.

Refer to figure E-6.

a. Removal.

(1) Disconnect electrical power from the unit.

(2) Remove the rear service panel by removing six machine screws.

(3) Prepare a diagram of the locations and wire colors for the two quick-disconnect lugs on the defective PCB.

(4) Unplug the two quick-disconnect lugs on the defective PCB.

NOTE

One wire of one quick-disconnect lug for each PCB will be green and will be located toward the edge of each PCB. The wire of the second quick-disconnect lug for each PCB will be colored red, yellow, or white.

(5) Remove the defective PCB by gently pulling toward the rear of the cabinet.

NOTE

Each PCB plugs into a module housing socket and each PCB is on glides.

b. Installation.

(1) Install a replacement PCB by inserting the leading edge into the housing glide and pushing forward until the PCB is firmly inserted into the housing socket.

(2) Replace the colored wiring quick-disconnect lugs following the diagram prepared in the preceding removal sequence.

(3) Test the replacement action. (Refer to paragraph 2-1.)

NOTE

Operation of the power modules can be verified by observing that each green LED is glowing. If not, refer to table 3-3 and check to assure that all wiring has been correctly replaced in this installation sequence. The wiring harness in figure 3-2 provides additional troubleshooting information.

(4) Install the rear service panel by replacing the six machine screws.

3-22. Fan assembly replacement.

Refer to figure E-6.

a. Removal.

(1) Disconnect electrical power from the unit.

(2) Remove the rear service panel by removing six machine screws.

(3) Determine which of the two fans is defective.

(4) Remove the three PCBs. (Refer to paragraph 3-21.)

(5) Remove the machine screw nut from the base of the two sections of the power module housing assembly.

(6) Cut and remove the wire ties holding the electrical wires to the power module housing assembly.

NOTE

The power module housing assembly can now be repositioned by lifting the housing above the machine screws.

(7) Position the housing for the best access to the defective fan assembly.

(8) Unfasten the fan assembly from the power module housing assembly by removing the four machine screws, washers, and nuts.

(9) Remove the fan blade shield by removing the single machine screw fastening the shield.

(10) Cut the two wires from the defective fan motor in a location that permits the subsequent connection of the fan motor wires.

(11) Remove the fan.

b. Installation.

(1) Connect the two wires from the fan motor to the two wires in the wiring harness.

(2) Install the fan shield by replacing the machine screw.

(3) Remount the fan assembly to the power module housing using the four machine screws, washers, and nuts.

(4) Reposition the power module housing onto the machine screws mountings.

(5) Replace the machine screw nut in the base of each section of the power module housing assembly.

(6) Replace the wire ties holding the electrical wires to the power module housing assembly.

(7) Complete the installation by following the sequence of steps in paragraph 3-21b.

(8) Test the replacement action. (Refer to paragraph 2-1.)

(9) Install the rear service panel by replacing the six machine screws.

3-23. Ultrasonic tank replacement.

Refer to figure E-7.

a. Removal.

(1) Disconnect electrical power from the unit.

(2) Drain and dry the tank, if filled.

(3) Remove the rear service panel by removing six machine screws.

(4) Remove the drain valve and pipe nipple.

(5) Remove all electrical wires from the power modules to each of the 18 transducers.

(6) Remove the four hex nuts from under the tank flange.

(7) Lift the tank from the cabinet.

b. Installation.

(1) Lower the replacement tank into the cabinet while aligning the flange studs with the holes in the cabinet.

(2) Install the four hex nuts.

(3) Wrap the pipe nipple with teflon pipe tape.

(4) Screw the nipple into the tank.

CAUTION

DO NOT USE EXCESSIVE FORCE when tightening the nipple.

(5) Replace the drain valve.

(6) Replace all electrical wires from the power module to each of the 18 transducers.

(7) Test the replacement action. (Refer to paragraph 2-1.)

(8) Install the rear service panel by replacing the six machine screws.

Section VIII. STORAGE AND SHIPMENT PROCEDURES

3-24. Preparation for storage or shipment.

This section contains the procedures for preparing the ultrasonic cleaner for indoor storage, shipment within a functional container, and shipment as a stand-alone item.

a. Storage procedures.

(1) Disconnect electrical power from the unit.

(2) Drain the ultrasonic tank.

(3) Perform the PMCS procedures identified in chapter 3, section IV.

(4) Roll the electrical cable and hose assembly into small coils and tie them.

(5) Perform the lubrication requirements identified in chapter 3, section III.

(6) Protect the unit with a plastic cover.

CAUTION

Do not completely seal the unit within a plastic cover unless desiccant is enclosed.

(7) Release caster brakes.

(8) Move unit to storage location.

WARNING

Shipment procedures must be followed if movement to the storage location involves lifting of the unit or movement by materials handling equipment.

b. Shipment procedures.

(1) Disconnect electrical power from the unit.

(2) Perform the lubrication requirements identified in chapter 3, section III.

(3) Perform the PMCS procedures identified in chapter 3, section IV.

(4) Remove the rear service panel by removing six machine screws.

(5) Install the two shipping brackets to secure the PCBs in the power module. (Refer to paragraph 3-7.)

(6) Replace the rear service panel by installing the six machine screws.

(7) Roll the electrical cable and the hose assembly into small coils and tie them.

NOTE

If the unit is to be evacuated for support maintenance services, skip to step 15.

(8) Protect the unit with a plastic cover.

(9) Remove the drain valve and pipe nipple.

(10) Remove the casters by following the procedures in paragraph 3-16.

(11) Collect the commercial operating manuals and this technical manual.

(12) Pack the four caster assembles, one hose assembly, one drain valve, one pipe nipple, two commercial operating manuals, two commercial maintenance manuals, and this technical manual into a carton.

(13) Place the carton into the tank basket.

(14) Place the tank cover on the unit.

(15) Arrange for crating and shipment.

CHAPTER 4

DIRECT SUPPORT AND GENERAL SUPPORT MAINTENANCE

Section I. GENERAL INFORMATION

4-1. Overview.

This chapter provides for the accomplishment of corrective maintenance that is beyond the capability, capacity, and authorization for unit level maintenance personnel. The procedures in this chapter should not be attempted at the unit level.

4-2. Support maintenance services.

Specified components or assembles identified in appendix B, section II, are only authorized for servicing by direct support (DS) and general support (GS) maintenance units.

Section II. POWER MODULE

4-3. Description of power module.

The ultrasonic cleaner power modules are solid state, automatic self-tuning, and full wave continuous power output electronic circuits. The modular, plug-in PCBs provide easy replacement by the use of glides. The LED indicator on each PCB provides visual status of the power module operation.

4-4. Theory of operation.

a. Oscillator section. (See figures 4-1 and 4-2.)

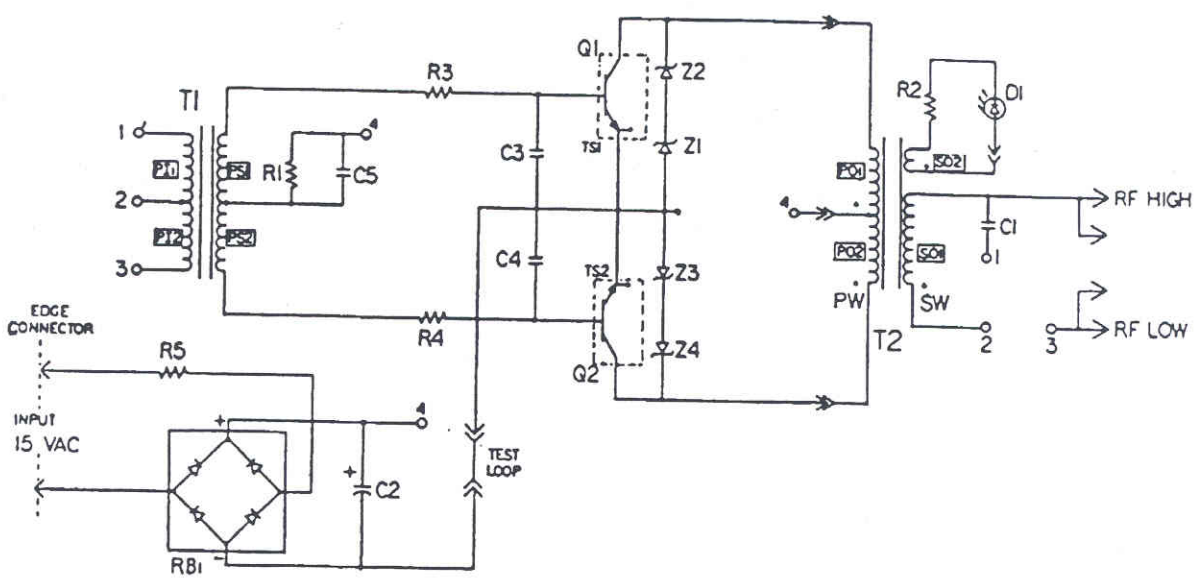

Figure 4-1. Power module wiring diagram.

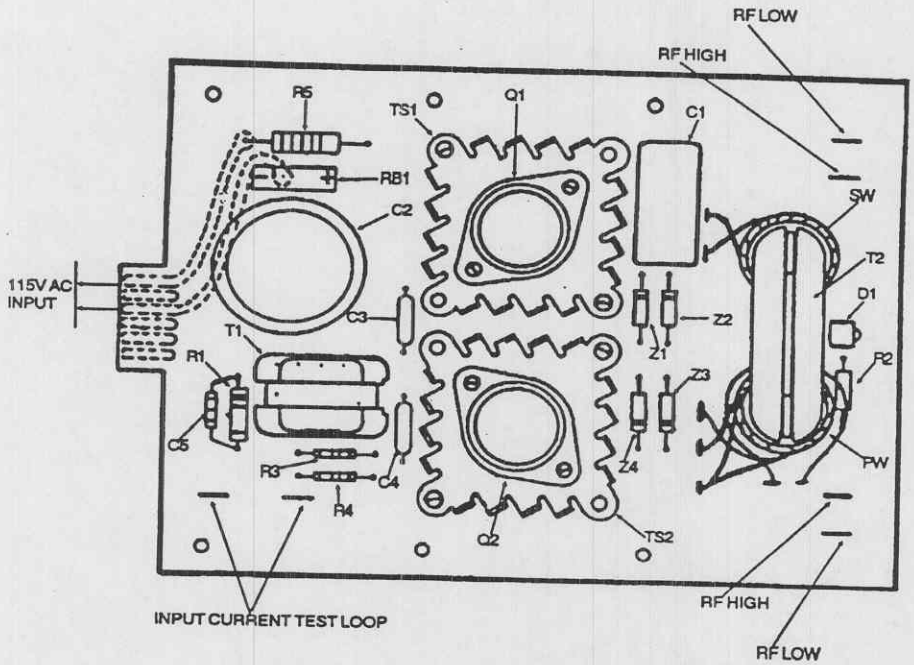

Figure 4-2. Power module assembly.

(1) The combination of input transformer T1, switching transistors Q1 and Q2, and output transformer T2 comprise a Class D oscillator which generates the ultrasonic power to operate the tank transducers.

(2) When electrical power is applied at point 4, the collector of transistor Q1 is forward-biased through the starting network of resister R1 and capacitor C5 and transistor Q1 draws current through the P01 winding of transformer T2. Current flowing in the P01 winding also induces a negative voltage across the P02 winding to turn transistor Q2 off. In addition, the current flowing in the P01 winding induces current to flow through the output circuit and through the PI1 winding of transformer T1. The current in the PI1 winding forward-biases transistor Q1 to hold it "on" and reverse-biases transistor Q2 to hold it "off."

(3) The rising magnetic field around the P01 winding of transformer T2 is also causing a voltage drop across the winding to increase until it equals the supply voltage. Current in the transistor Q1 and P01 winding combination then drops to zero. The current through the PI2 winding of transformer T1 now drops to zero. The loss of current in the PI2 winding reverses the polarities of the PS1 and PS2 windings to turn transistor Q1 "off" and transistor Q2 "on."

(4) The sustained operation resulting from the alternate operation of transistors Q1 and Q2 occurs at a frequency determined by the inductances of the SO1 and S01 windings, transformer T2, and the capacitance of capacitor C1 and the tank transducers.

(5) The series combination of capacitor C1 and the PI1 winding of transformer T1 provides voltage feedback to control the amplitude of the output voltage and the phase relationship between transistor collector current and voltage waves.

(6) A single turn of wire through the core of transformer T2 supplies power to operate the LED to indicate the operation of the module.

b. Power supply section.

(1) The bridge rectifier RB1 and filter capacitor C2 convert the alternating current (AC) line voltage to supply direct current (DC) to the oscillator section.

(2) The resister R5 is fusible to prevent the rectifier from damaging other PCB components.

WARNING

The EMI assembly is designed to reduce external electrical power line conducted interference for compliance with Federal Communication Commission regulations.

NOTE

The electrical power to this section is directed through a low-pass filter network identified as the EMI assembly.

4-5. Normal operation.

Typical oscilloscope displays associated with normal power module operation are illustrated in figure 4-3. The illustration includes oscilloscope settings.

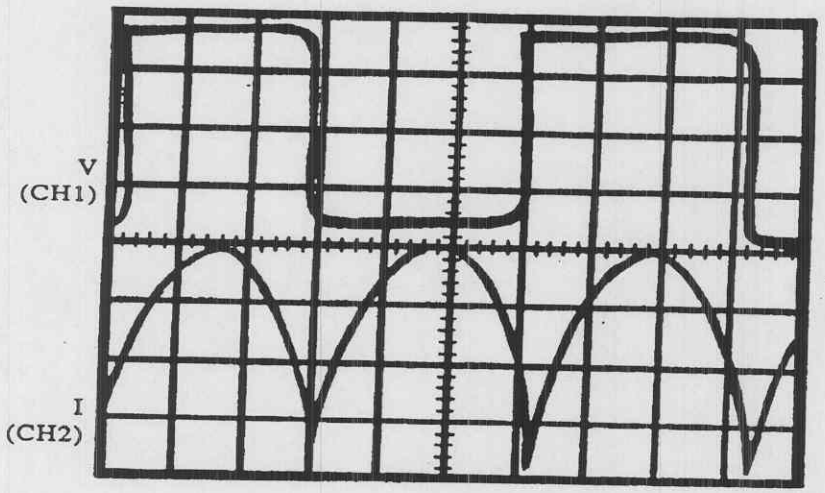

SCOPE SETTING: CH1 - 100 V/CM
CH2 - 1 AMP/CM
SWEEP - 5 μS/CM

INPUT VOLTAGE: 120 VOLTS
INPUT CURRENT: 2-2.5 AMPS DC

Figure 4-3. Power module oscilloscope displays.

4-6. Troubleshooting.

Use the following procedures to troubleshoot a power module.

WARNING

LETHAL voltages will be accessible during these procedures. Only qualified medical equipment repairers will perform this troubleshooting.

NOTE

Voltage test point 1 is located at the juncture of the anodes of zener diodes Z2 and Z3.
Voltage test point 2 is located at the juncture of collector Q1 and zener diode Z2.

a. Remove the rear service panel by removing the six machine screws.

b. Start the unit by following the procedures in paragraph 2-1.

c. If no ultrasonic activity is present and the LEDs do not glow, connect an oscilloscope into the circuitry by following the test instrumentation schematic in figure 4-4 and observe the oscilloscope parameters in figures 4-5 through 4-11. The figures illustrate possible abnormalities.

d. The direct current drawn by the power module can be measured by removing the test loop jumper (see fig 4-4) or by using a clip-on ammeter.

WARNING

Assure that the test loop jumper wire is replaced when testing is completed.

CAUTION

This direct current reading will vary between 1.8 amps and 2.6 amps since the reading is greatly influenced by such variables as supply line voltage, cleaning solution temperature, detergent concentration, load mass, etc.

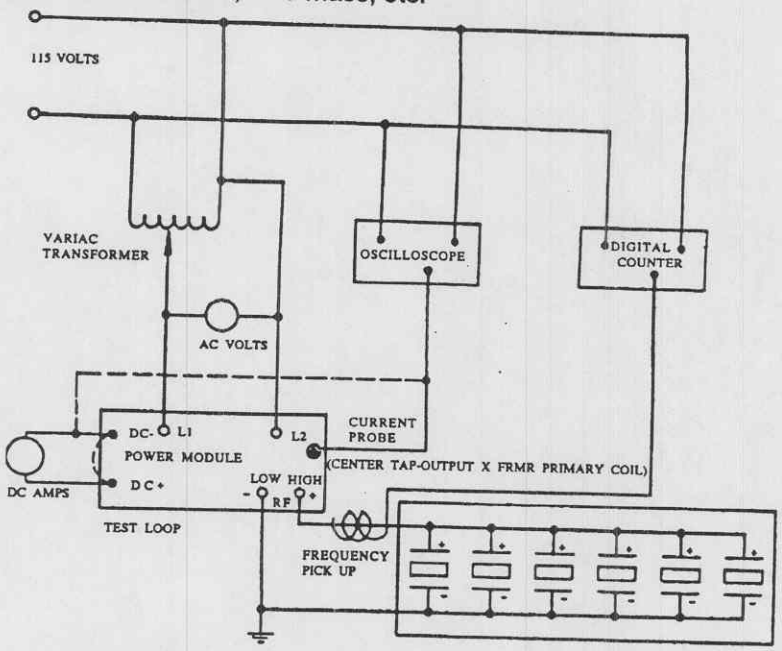

Figure 4-4. Test instrumentation schematic.

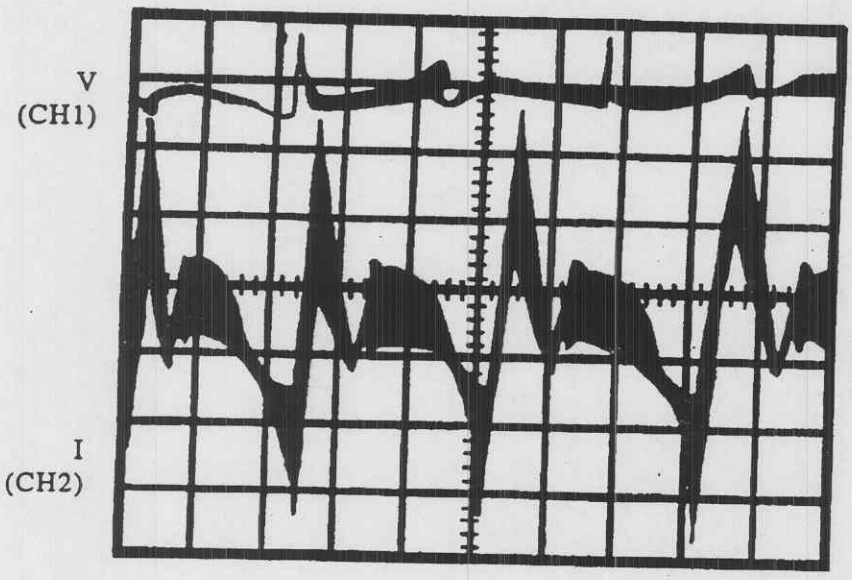

SCOPE SETTING: CH1 = 5 V/CM
CH2 = 1 AMP/CM
SWEEP = 5 μS/CM

INPUT VOLTAGE: 0.5 VAC
INPUT CURRENT: 1 AMP DC

Figure 4-5. Output open-circuited.

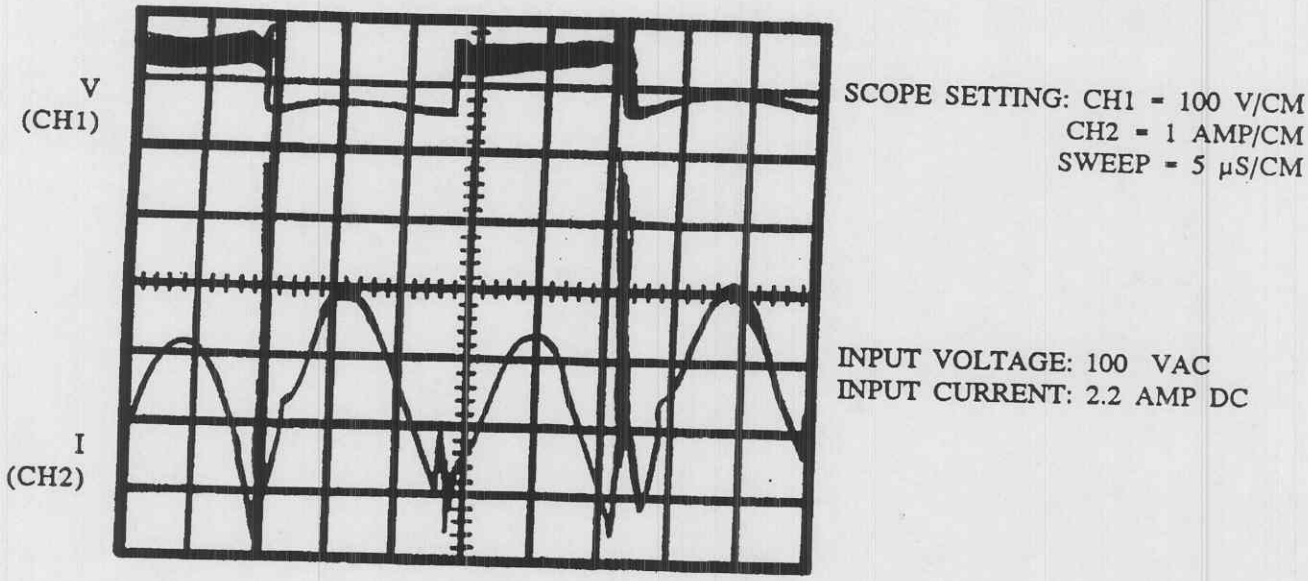

Figure 4-6. Damaged transducer(s) or fractured transducer bond(s).

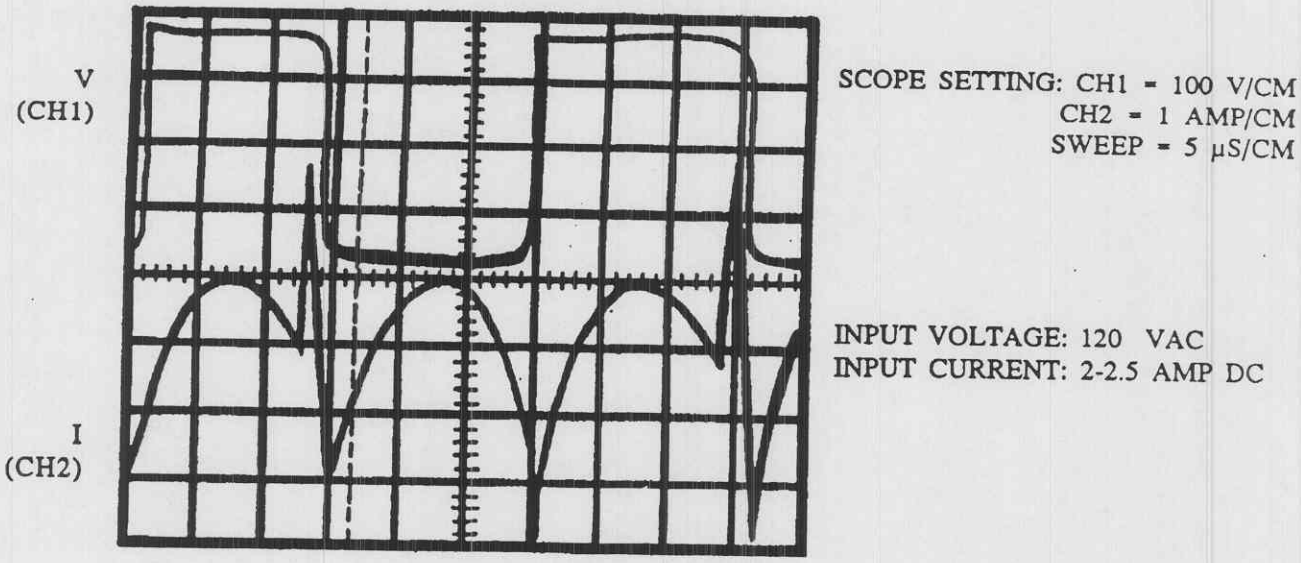

Figure 4-7. Mismatched transistors Q1 and Q2.

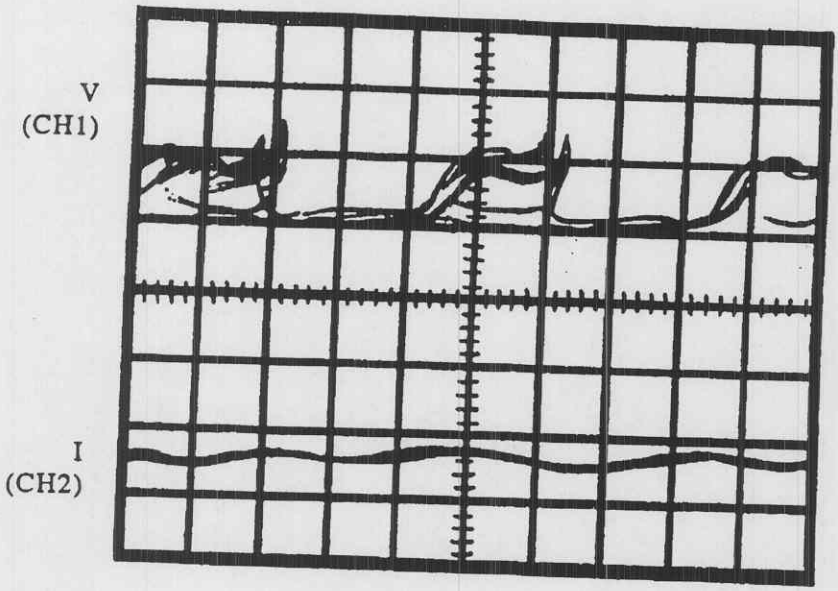

SCOPE SETTING: CH1 = 100 V/CM
CH2 = 1 AMP/CM
SWEEP = 5 μS/CM

INPUT VOLTAGE: 50 VAC
INPUT CURRENT: 0.3 AMP DC

Figure 4-8. Capacitor C2 open.

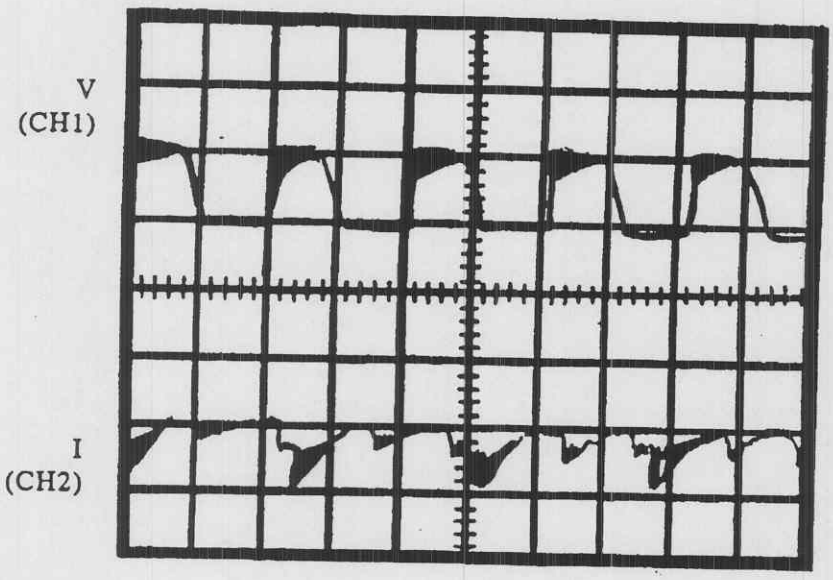

SCOPE SETTING: CH1 = 100 V/CM
CH2 = 1 AMP/CM
SWEEP = 5 μS/CM

INPUT VOLTAGE: 50 VAC
INPUT CURRENT: 0.2 AMP DC

Figure 4-9. Resistors R3 or R4 open.

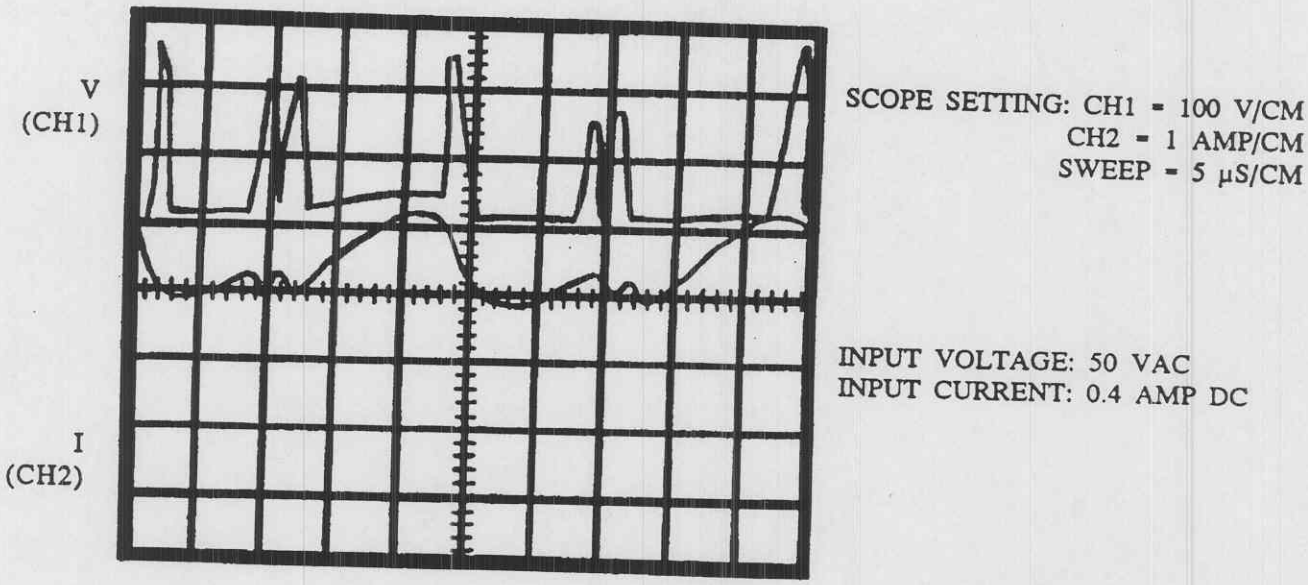

Figure 4-10. Output transformer primary coil open.

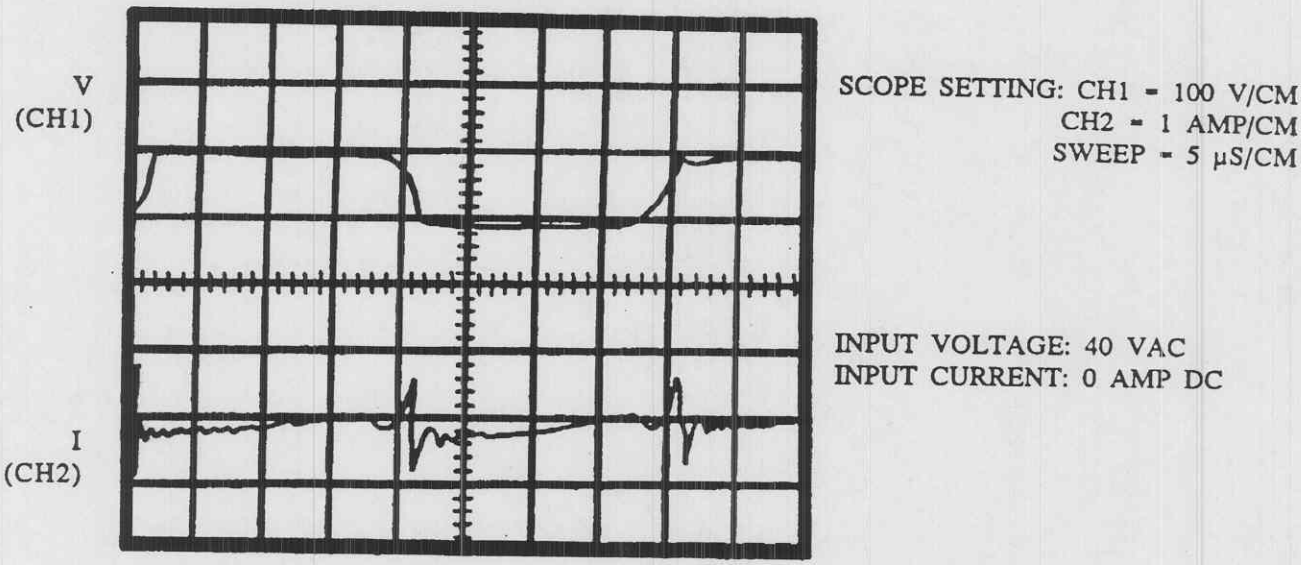

Figure 4-11. Output transformer secondary coil open.

e. An operational evaluation of diodes and transistors should be accomplished with the components removed from the PCB. Figure 4-12 provides testing parameters and remedial actions.

OHMMETER +	POLARITY −	RESISTANCE IN OHMS SCALE - RX100	REMEDIAL ACTION IF MEASUREMENT DOES NOT AGREE
Collector	Emitter	High	Replace transistor 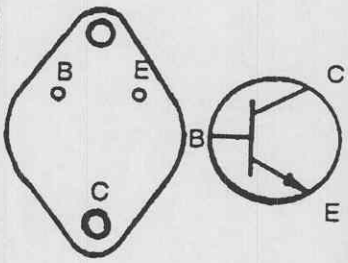
Emitter	Collector	High	
Collector	Base	High to 4 - 6	
Base	Collector		
Base	Emitter	to 4 - 6	
Emitter	Base	High	
Cathode	Anode	High to 4 - 6	Replace diode 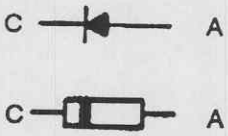
Anode	Cathode		

NOTE: Meter function switch set to + DC.

B = base E = emitter C = collector

Figure 4-12. Transistor and diode troubleshooting.

4-7. Power module component replacements.

a. Removal.

(1) Note the position of the component. If necessary, tag the electrical leads.

(2) Cut the component from the PCB.

(3) Straighten the remaining component wire leads using long-nose pliers.

(4) Unsolder the wire leads.

WARNING

When soldering/unsoldering components which are susceptible to heat damage, use an appropriate heat sink between the component and the point of soldering to prevent damage.

(5) Clean the PCB terminal holes.

CAUTION

Use only 60/40 rosin core solder to prevent corrosion damage.

b. Installation.

(1) Install the component wire leads into the PCB terminal holes.

(2) Trim the component wire leads.

(3) Solder a firm electrical connection observing the preceding warning.

(4) Test the replacement action.

4-8. Repair of copper conductor lands.

Copper conductor lands on the PCBs can usually be repaired using the bridging process as follows:

a. Clean the copper conductor land on both sides of a break by using a very fine sandpaper.

b. Acquire and cut a section of copper wire to bridge the break and extend 1/8 inch on both sides of the break.

c. Solder the wire to the copper conductor land. Maintain a smooth, unbroken fillet of solder on both sides of the copper wire.

Section III. TRANSDUCERS

4-9. Description of transducers.

The LZT transducers are a sandwich-type composite construction consisting of an aluminum radiating block, two LZT-ceramic crystal elements, a steel-plated loading block, and a 3/8-inch bolt with an insulator/ground lug. The transducers provide a high energy conversion and are wired in parallel circuitry with three groups of six transducers.

4-10. Theory of operation.

The transducers convert electrical energy, supplied by the power modules, to mechanical sound energy transmitted through the tank bottom into the cleaning solution. The phenomenon of cavitation is produced by sound waves passing through the liquid causing the creation of millions of microscopic bubbles which collapse with pressure. The collapsing bubbles blast contaminants free from material surfaces.

4-11. Troubleshooting.

A minimum of troubleshooting can be accomplished on the transducers. The components of a transducer are illustrated in figure E-8. Troubleshooting procedures are as follows:

a. Disconnect the eight electrical leads from the transducers.

b. Short the leads to ground to remove any residual electrical charges.

c. Visually inspect the electrical leads for evidence of electrical arcing at the connection points.

d. Use an ohmmeter on the R X 100 k ohm scale and measure across the transducer leads. The ohmmeter should indicate 1 megohm or higher.

4-12. Transducer component replacements.

a. Removal and disassembly.

(1) Remove the ultrasonic tank from the cabinet. (Refer to paragraph 3-23.)

(2) Remove the center bolt.

(3) Disassemble the transducer and arrange as depicted in figure E-8.

(4) Examine the faces of the ceramic elements. If necessary, clean with number 400 grit paper. Place the grit paper on a solid, flat surface and rub the ceramic element faces with a figure 8 pattern.

(5) Replace broken ceramic elements as well as elements that cannot be cleaned following the preceding step.

(6) Clean all components using a clean, soft cloth dampened with a chlorinated or fluorinated solvent.

b. Assembly and installation.

(1) Verify the arrangement of the transducer components.

NOTE

The positive face of the two ceramic elements shall be in contact with the electrode. The positive face of the ceramic elements can be identified by a *black dot* on their edges.

(2) Center all components and place the bolt through the center hole.

NOTE

The insulator/electrical lug should prevent contact between the bolt and the ceramic elements.

(3) Tighten the bolt using a torque wrench to 550 inch-pounds.

(4) Install the tank. (Refer to paragraph 3-23.)

(5) Test the unit.

4-13. Transducer replacements.

a. Removal.

(1) Remove the tank from the cabinet. (Refer to paragraph 3-23.)

(2) Heat the inside of the tank over a transducer with a propane or other similar torch. At the same time, with a hex wrench placed in the transducer bolt head, gently apply pressure to free the transducer. An alternate method would be to use a putty knife or similar tool between the epoxy cement and the tank to free the transducer.

CAUTION

If removing only one or two transducers, extreme care should be exercised not to heat the area over other transducers which would affect their bonds.

(3) Clean old epoxy cement from the tank bottom and the transducer radiating surface.

CAUTION

While the epoxy cement may be removed by burning, the old epoxy cement on the transducer radiating surface should only be removed by careful sanding.

b. Installation.

(1) Roughen the bottom surface of the tank and the transducer radiating surface.

NOTE

If possible, the bottom of the tank and the transducer radiating surface should be sandblasted.

(2) Wash the bottom of the tank and the transducer radiating surface with hot water and alkali cleaner.

(3) Rinse the tank.

CAUTION

Rubber gloves should be worn to protect your hands from alkali cleaner.

Do not touch cleaned surfaces with your hands to prevent the transfer of skin contaminants which would affect the quality of the subsequent transducer bond.

NOTE

The water should be about 120° F (49° C) to assure proper action by the alkali cleaner. Alkali cleaner is supplied with the transducer adhesive kit.

(4) Spread a layer of the epoxy cement on one side of the fiberglass disk.

(5) Apply the disk to the tank in the proper location. Use careful pressure to allow the epoxy cement to flow evenly between the disk and the tank.

(6) Spread a layer of the epoxy cement on the transducer radiating surface.

(7) Apply the transducer to the fiberglass disk on the tank. Apply pressure evenly to allow the removal of all air bubbles.

(8) Tape in position using masking tape.

(9) Cure the epoxy cement in an oven at 185° F (85° C) for 3 hours.

(10) Install the tank. (Refer to paragraph 3-23.)

(11) Test the unit. (Refer to paragraph 2-1.)

APPENDIX A

REFERENCES

A-1. Army regulations.

AR 40-61	Medical Logistics Policies and Procedures
AR 710-2	Supply Policy Below the Wholesale Level
AR 725-50	Requisitioning, Receipt, and Issue System
AR 750-1	Army Materiel Maintenance Policy and Retail Maintenance Operations
AR 750-43	Test, Measurement, and Diagnostic Equipment Program

A-2. Technical manual.

TM-DPSC-6500-RPL	Medical Materiel: Medical Repair Parts Reference List

A-3. Technical bulletins.

TB 38-750-2	Maintenance Management Procedures for Medical Equipment
TB 43-180	Calibration and Repair Requirements for the Maintenance of Army Materiel
TB 740-10/DLAM 4155.5/AFR 67-43	Quality Control, Depot Storage Standards, Appendix M, Medical Supplies
TB 750-8-1	Maintenance Expenditure Limits for Medical Materiel: FSC Groups (Medical Only)

A-4. Field manual.

FM 21-11	First Aid for Soldiers

A-5. Supply bulletins.

SB 700-20	Army Adopted/Other Items Selected for Authorization/List of Reportable Items
SB 708-48	Cataloging Handbook H4/H8, Commercial and Government Entity (CAGE) Sections A & B

A-6. Other publications.

(These publications may be obtained from Commander, U.S. Army Medical Materiel Agency, ATTN: SGMMA-M, Frederick, MD 21702-5001.)

Operating Instruction Manual, Sonicor Instrument Corporation

Maintenance Manual, Sonicor Instrument Corporation

APPENDIX B

MAINTENANCE ALLOCATION CHART

Section I. INTRODUCTION

B-1. General.

a. This section provides a general explanation of all maintenance and repair functions authorized at various maintenance levels.

b. Section II designates overall responsibility for the performance of maintenance functions on the identified end item or component. The implementation of the maintenance functions upon the end item or component will be consistent with the assigned maintenance levels.

c. Section III lists the tools and test equipment required for each maintenance function as referenced from Section II.

d. Section IV contains supplemental instructions, explanatory notes, and/or illustrations required for a particular maintenance function.

B-2. Explanation of columns in section II.

a. Group Number, Column 1. The assembly group number (Group No.) column is a numerical group assigned to each assembly. The applicable assembly groups are listed in the maintenance allocation chart (MAC) in disassembly sequence beginning with the first assembly removed in a top down disassembly sequence.

b. Assembly Group, Column 2. This column contains a brief description of the components of each assembly group.

c. Maintenance Functions, Column 3. This column lists the various maintenance functions (A through K) and indicates the lowest maintenance level authorized to perform these functions. The symbol designations for the various maintenance levels are as follows:

C - Operator or crew

O - Unit maintenance

F - Direct support maintenance

H - General support maintenance

D - Depot maintenance

The maintenance functions are defined as follows:

A - Inspect. To determine serviceability of an item by comparing its physical, mechanical, and electrical characteristics with established standards.

B - Test. To verify serviceability and to detect electrical or mechanical failure by use of test equipment.

C - Service. To clean, to preserve, to charge, and to add lubricants, cooling agents, and air. If it is desired that elements, such as painting and lubricating, be defined separately, they may be so listed.

D - Adjust. To rectify to the extent necessary to bring into proper operating range.

E - Align. To adjust specified variable elements of an item to bring it to optimum performance.

F - Calibrate. To determine the corrections to be made in the readings of instruments or test equipment used in precise measurement. Consists of the comparison of two instruments, one of which is a certified standard of known accuracy, to detect and adjust any discrepancy in the accuracy of the instrument being compared with the certified standard.

G - Install. To set for use in an operational environment such as tents or International Standards Organization shelters.

H - Replace. To replace unserviceable items with serviceable like items.

I - Repair. Those maintenance operations necessary to restore an item to serviceable condition through correction of material damage to a specific failure. Repair may be accomplished at each level of maintenance.

J - Overhaul. Normally the highest degree of maintenance performed by the Army in order to minimize time work in process consistent with quality and economy of operation. It consists of that maintenance necessary to restore an item to completely serviceable condition as prescribed by a maintenance standard in technical publications for each item of equipment. Overhaul normally does not return an item to like new condition.

K - Rebuild. The highest degree of material maintenance. It consists of restoring equipment as nearly as possible to new condition in accordance with original manufacturing standards. Rebuild is performed only when required by operational considerations or other paramount factors and then only at the depot maintenance level.

d. Tools and Equipment, Column 4. This column is provided for referencing by code, the tools and test equipment (sec III) required to perform the maintenance functions.

e. Remarks, Column 5. This column is provided for referencing by code, the remarks (sec IV) pertinent to the maintenance functions.

B-3. Explanation of columns in section III.

a. Reference Code, Column 1. This column correlates to section II, column 4.

b. Maintenance Level, Column 2. This column identifies the maintenance levels using the tools and test equipment.

c. Nomenclature, Column 3. This column identifies the tools and test equipment.

d. National Stock Number, Column 4. This column provides the national stock number (NSN) of the specific tools or test equipment.

B-4. Explanation of columns in section IV.

a. Reference Code, Column 1. This column correlates to section II, column 5.

b. Remarks, Column 2. This column provides supplemental information or explanatory notes pertinent to the maintenance function in section II.

Section II. MAINTENANCE ALLOCATION CHART FOR ULTRASONIC CLEANER

(1) GROUP NO.	(2) ASSEMBLY GROUP	(3) MAINTENANCE FUNCTIONS A	B	C	D	E	F	G	H	I	J	K	(4) TOOLS AND EQUIPMENT	(5) REMARKS
00	Ultrasonic Cleaner	O 0.5	O 1.0	O 0.5	O	O	O	O 1.0	O	O	F 6.0	D 8.0	01,02,03,04 05,06,07,08	CODE A,B
01	Mechanical System												01,02,03	CODE A
011	Cabinet	O 0.1		O 0.3		F 0.5				F 0.6				
012	Caster Assembly			O 0.2					O 0.1	O 0.3				
013	Cover, Tank					O 0.2			O 0.1					
014	Drain Valve								O 0.1	O 0.2				
015	Hose Assembly								O 0.1	O 0.1				
02	Electrical System												01,02,04,06	CODE A,B
021	Line Cord	O 0.1	O 0.2						O 0.1	O 0.2				
022	Fuseholder	O 0.1	O 0.1						O 0.2	O 0.2				
023	Indicator Lamp	O 0.1	O 0.2						O 0.3	O 0.1				
024	Terminal Strip	O 0.1	O 0.2						O 0.2					
025	Fan Assembly	O 0.2	O 0.3						O 0.5	O 0.4				
026	Transformer	O 0.2	O 0.3						O 0.5	O 0.2				
03	Controls												01,02,04,06	
031	Timer						O 0.2		O 0.3	O 0.2				
04	Electronic System												01,02,03,04 05,06,07,08	CODE A,B
041	EMI Assembly	O 0.2	O 0.6						O 0.4	O 0.5				
042	PCB	O 0.2	O 0.4						O 0.4	F 1.0	D 2.0			

Section II. MAINTENANCE ALLOCATION CHART FOR ULTRASONIC CLEANER

(1) GROUP NO.	(2) ASSEMBLY GROUP	(3) MAINTENANCE FUNCTIONS											(4) TOOLS AND EQUIPMENT	(5) REMARKS
		A	B	C	D	E	F	G	H	I	J	K		
05	Tank Assembly												01,02,03,04 05,06,07,08	CODE A,B
051	Tank	O 0.2							O 1.2	F 3.0	D 8.0			
052	Transducer	O 0.4	4.0	8.0					D		D			

Section III. TOOLS AND TEST EQUIPMENT FOR ULTRASONIC CLEANER

(1) REFERENCE CODE	(2) MAINTENANCE LEVEL	(3) NOMENCLATURE	(4) NATIONAL STOCK NUMBER
01	O,F,H,D	Tool Kit, Medical Equipment Maintenance and Repair: Repairmans	5180-00-611-7923
02	O,F,H,D	Tool Kit, Medical Equipment Maintenance and Repair: Organizational	5180-00-611-7924
03	F,H	Shop Equipment, Medical Maintenance: Depot (MEDSOM) Maintenance	4940-00-594-6455
04	O,F,H,D	Oscilloscope	6625-01-187-7847
		or	
		Oscilloscope w/Amplifier, Dual Trace w/Plug-in Module	6625-01-007-9416 6625-00-361-5318 6625-00-261-5139
05	O,F,H,D	Multimeter, AN/USM 486	6625-01-145-2430
		or	
		Multimeter, AN/PSM 45A	6625-01-265-6000
06	O,F,H,D	Tester, Current Leakage	6625-01-142-8233
07	O,F,H,D	Test Set, Circuit Component	6625-01-255-0839
08	O,F,H,D	Tester, Semiconductor	6625-00-138-7320

Section IV. REMARKS FOR ULTRASONIC CLEANER

(1) REFERENCE CODE	(2) REMARKS
A	Tools and test equipment are listed for each assembly group.
B	Perform an annual electrical safety inspection and test. Perform the inspection and test after repair or replacement of electrical or electronic components or modules.

APPENDIX C

COMPONENTS OF END ITEM AND BASIC ISSUE ITEMS LIST

Section I. INTRODUCTION

C-1. Scope.

This appendix lists components of end item and basic issue items for the ultrasonic cleaner to help you inventory items required for safe and efficient operation.

C-2. General.

The Components of End Item and Basic Issue Items lists are divided into the following sections.

a. Section II. Components of End Item. These items are part of the end item, but are removed and separately packaged for transportation or shipment. As part of the end item, these items must be with the end item whenever it is issued or transferred between property accounts.

b. Section III. Basic Issue Items. These are the minimum essential items required to place the power unit in operation, to operate it, and to perform emergency repairs. Although shipped separately packaged, basic issue items must be with the ultrasonic cleaner during operation and whenever it is transferred between property accounts. This manual is your authority to request or requisition basic issue items, based on MTOE authorization of the end item.

C-3. Explanation of columns.

The following provides an explanation of columns found in both listings:

a. Item Number, Column 1. This column indicates the item number assigned to the item.

b. National Stock Number, Column 2. This column indicates the national stock number assigned to the item.

c. Description, Column 3. This column indicates the federal item name and, if required, a minimum description to identify and locate the item. The last line for each item indicates the commercial and government entity (CAGE) code in parentheses followed by the part number.

d. Unit of Measure, Column 4. This column indicates the unit of measure used in performing the actual operational or maintenance function. This measure is expressed by a two-character alphabetical abbreviation. These abbreviations are listed in the glossary.

e. Quantity, Column 5. This column indicates the quantity (QTY) of the item(s) to be used with or on the equipment.

Section II. COMPONENTS OF END ITEM FOR ULTRASONIC CLEANER

(1) ITEM NUMBER	(2) NATIONAL STOCK NUMBER	(3) DESCRIPTION	(4) UNIT OF MEASURE	(5) QTY
1	5340-01-272-0225	Caster Assembly (31605) S870223	EA	4
2	4940-01-265-0038	Basket, Dipping-Draining (31605) F320437	EA	1
3	4820-01-267-2462	Cock, Poppet, Drain (31605) 620559	EA	1
4		Cover (Tank) (31605) F320436	EA	1

Section III. BASIC ISSUE ITEMS FOR ULTRASONIC CLEANER

(1) ITEM NUMBER	(2) NATIONAL STOCK NUMBER	(3) DESCRIPTION	(4) UNIT OF MEASURE	(5) QTY
1	4720-01-267-2465	Hose Assembly (31605) 670307	EA	1
2		Operating Instruction Manual (31605) None	EA	1
3		Maintenance Manual (31605) None	EA	1

APPENDIX D

EXPENDABLE AND DURABLE SUPPLIES AND MATERIALS LIST

Section I. INTRODUCTION

D-1. Scope.

This appendix lists expendable and durable supplies and materials that are required to maintain the equipment. This listing is authorization to requisition and retain the items if not otherwise authorized.

D-2. Explanation of columns.

a. Item Number, Column 1. The item number (Item No.) is sequentially assigned.

b. Level, Column 2. This column identifies the lowest level of maintenance that requires the listed item. An explanation of the alphabetical character is provided in appendix B, section I of this manual.

c. National Stock Number, Column 3. This column indicates the national stock number assigned to the item.

d. Description, Column 4. This column indicates the federal item name and, if required, a minimum description to identify and locate the item. The last line for each item indicates the CAGE code in parentheses followed by the part number.

e. Unit of Measure, Column 5. This column indicates the unit of measure used in performing the actual operational or maintenance function. This measure is expressed by a two-character alphabetical abbreviation. These abbreviations are listed in the glossary.

f. Quantity, Column 6. This column indicates the quantity (QTY) of the item(s) to be used with or on the equipment.

Section II. EXPENDABLE AND DURABLE SUPPLIES AND MATERIALS LIST FOR ULTRASONIC CLEANER

(1) ITEM NO.	(2) LEVEL	(3) NATIONAL STOCK NUMBER	(4) DESCRIPTION	(5) UNIT OF MEASURE	(6) QTY
1	O	7920-01-004-7847	Cloth, Cleaning (97327) Rymple Cloth 301	RO	1
2	O	5935-00-148-8190	Connector, Electrical (75582) 5266HGN (74545) 8215C (71183) 8266N	BX	1
3	O	6850-00-110-4498	Cleaning Compound (81348) PD680	PT	1
4	O	7920-00-543-7148	Brush, Dusting (81348) HB00190	EA	1
5	O	7930-00-926-5171	Polish, Stainless Steel (81348) P-C-1121	PT	1
6	O	8030-00-889-3534	Tape, Teflon, 3/10 in. (81349) MIL-T-27730	RO	1

APPENDIX E

REPAIR PARTS AND SPECIAL TOOLS LIST

Section I. INTRODUCTION

E-1. Scope.

This manual lists spare and repair parts, special tools, special test equipment; and other special support equipment required for the performance of unit level, direct support, general support, and depot level maintenance. It authorizes the requisitioning and issue of spare and repair parts in consonance with the MAC (app B).

E-2. General.

The Repair Parts and Special Tools List is divided into the following sections:

a. Repair Parts, Section II. A list of repair parts authorized for the performance of maintenance in figure number and item number sequence.

b. Special Tools, Test, and Support Equipment, Section III. A list of special tools, test, and support equipment authorized for the performance of maintenance.

E-3. Explanation of columns in section II.

a. Illustration, Column 1.

(1) *Figure Number.* This column indicates the figure number (Fig No.) of the illustration on which the item is shown.

(2) *Item Number.* This column indicates the item number (Item No.) used to identify each item on the illustration.

b. National Stock Number, Column 2. This column indicates the national stock number assigned to the item.

c. Description, Column 3. This column indicates the federal item name of the item. The last line for each item indicates the CAGE code in parentheses followed by the part number.

d. Unit of Measure, Column 4. This column indicates the unit of measure used in performing the actual operational or maintenance function. This measure is expressed by a two-character alphabetical abbreviation.

e. Quantity, Column 5. This column indicates the quantity (QTY) of the item(s) to be used with or on the equipment.

E-4. Explanation of columns in section III.

a. Item Number, Column 1. This number is sequentially assigned.

b. Level, Column 2. This column identifies the lowest level of maintenance that requires the listed item. An explanation of the alphabetical character is provided in appendix B, section I of this manual.

c. National Stock Number, Column 3. This column indicates the national stock number assigned to the item.

d. Description, Column 4. This column indicates the federal item name and, if required, a minimum description to identify and locate the item. The last line for each item indicates the CAGE code in parentheses followed by the part number.

e. Unit of Measure, Column 5. This column indicates the unit of measure used in performing the actual operational or maintenance function. This measure is expressed by a two-character alphabetical abbreviation.

f. Quantity, Column 6. This column indicates the quantity (QTY) of the item(s) to be used with or on the equipment.

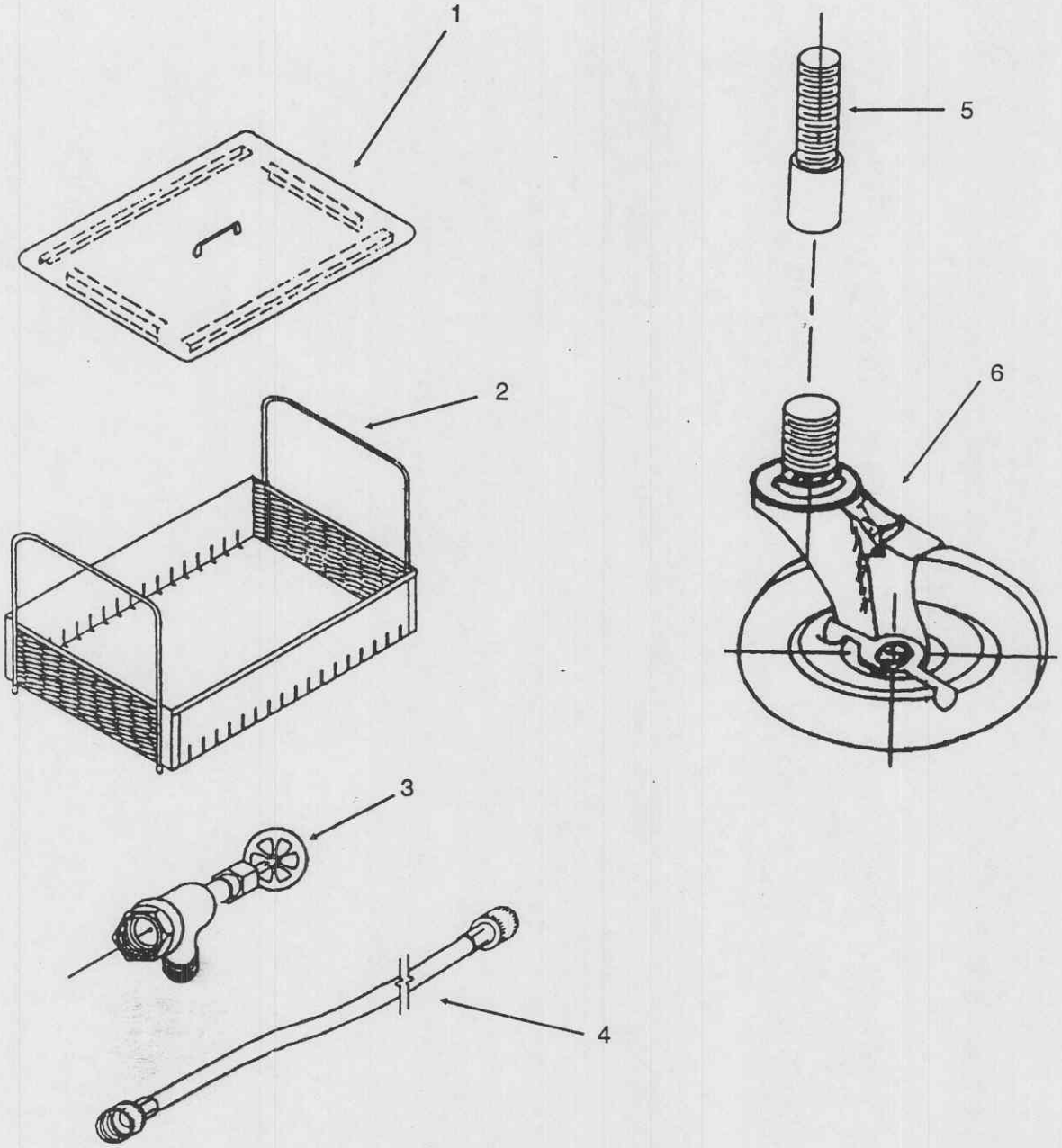

Figure E-1. Mechanical components.

Section II. REPAIR PARTS LIST FOR ULTRASONIC CLEANER

(1) ILLUSTRATION		(2) NATIONAL STOCK NUMBER	(3) DESCRIPTION	(4) UNIT OF MEASURE	(5) QTY
FIG NO.	ITEM NO.				
E-1	1		Cover, Tank (31605) F320436	EA	1
E-1	2	4940-01-265-0038	Basket (31605) F320437	EA	1
E-1	3	4820-01-267-2462	Valve, Drain (31605) 620559	EA	1
E-1	4	4720-01-267-2465	Hose Assembly (31605) 670307	EA	1
E-1	5	5340-01-272-0225	Caster Assembly (31605) S870223	EA	4
E-1	6		Adapter, Caster (31605) T870223	EA	4
	*	5310-01-267-2468	Washer (31605) S620560	EA	1

*INDICATES PART(S) THAT ARE NOT SHOWN IN THE ILLUSTRATION.

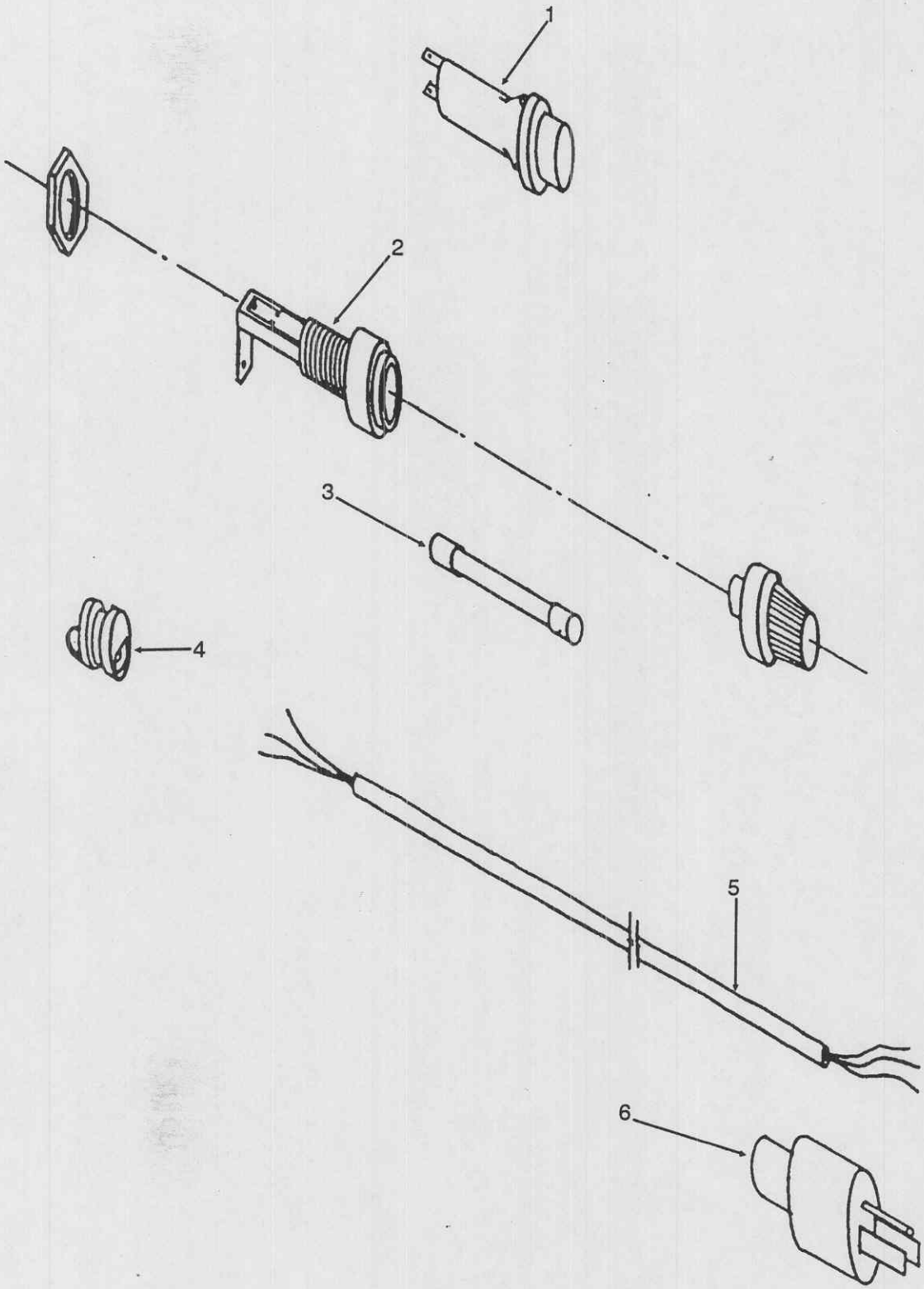

Figure E-2. Electrical components.

Section II. REPAIR PARTS LIST FOR ULTRASONIC CLEANER

(1) ILLUSTRATION		(2) NATIONAL STOCK NUMBER	(3) DESCRIPTION	(4) UNIT OF MEASURE	(5) QTY
FIG NO.	ITEM NO.				
E-2	1	6210-01-118-8430	Lamp, Indicator (31605) 800101	EA	1
E-2	2	5920-00-031-5181	Fuseholder (31605) S820553	EA	1
E-2	3	5920-00-284-8879	Fuse, 12-amp (31605) 820512	EA	1
		or			
E-2	3	5920-00-548-3126	Fuse, 6-amp (31605) 820506	EA	1
E-2	4		Strain Relief (31605) 850163	EA	1
E-2	5		Cable, Electrical (31605) 830013	FT	6
E-2	6		Connector, Electrical, Male, 115 V (31605) 680001	EA	1

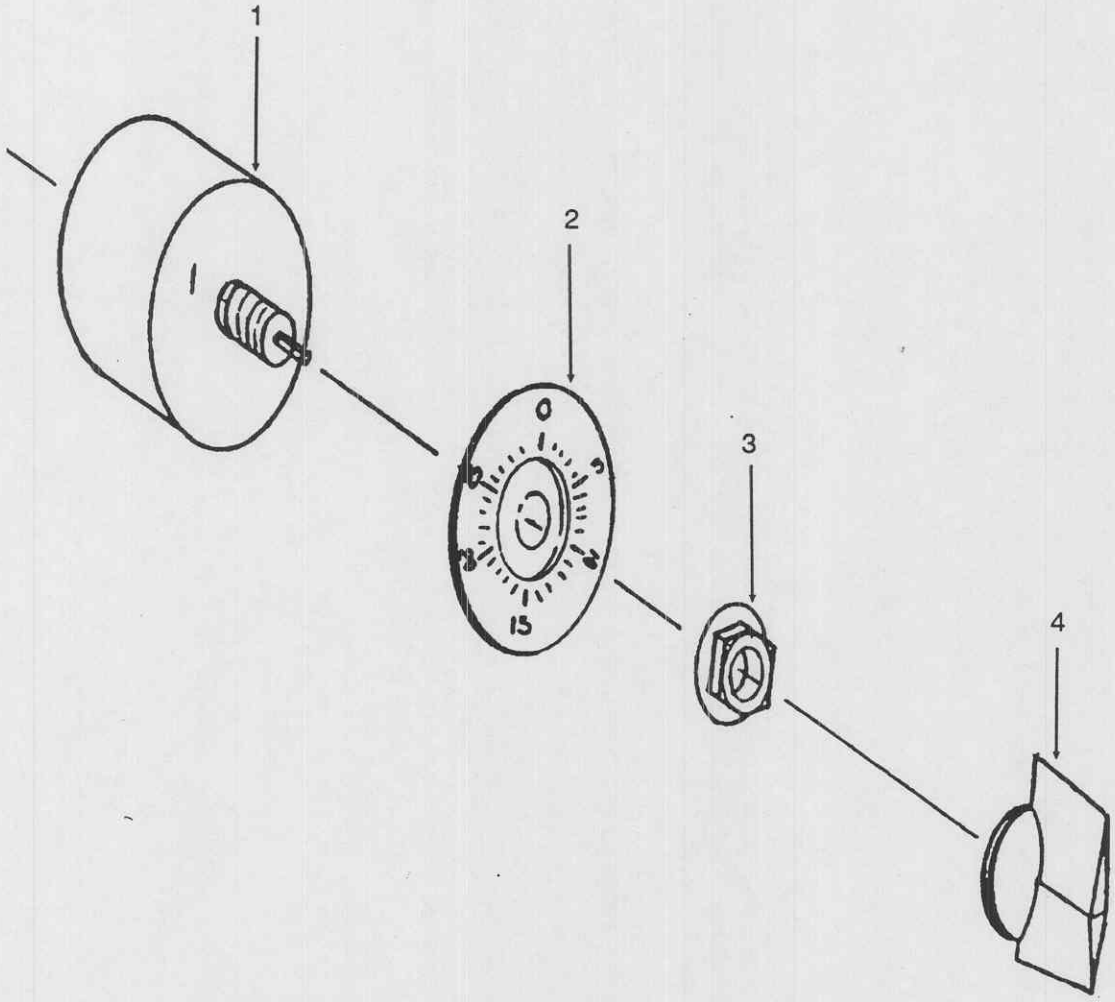

Figure E-3. Timer.

Section II. REPAIR PARTS LIST FOR ULTRASONIC CLEANER

(1) ILLUSTRATION		(2) NATIONAL STOCK NUMBER	(3) DESCRIPTION	(4) UNIT OF MEASURE	(5) QTY
FIG NO.	ITEM NO.				
E-3	1	6645-01-267-2544	Timer, Interval (31605) S821012	EA	1
E-3	2		Dial, Timer (31605) 820162	EA	1
E-3	3		Nut, Timer (31605) 820139	EA	1
E-3	4	5355-00-821-5225	Knob, Timer (31605) 820155	EA	1

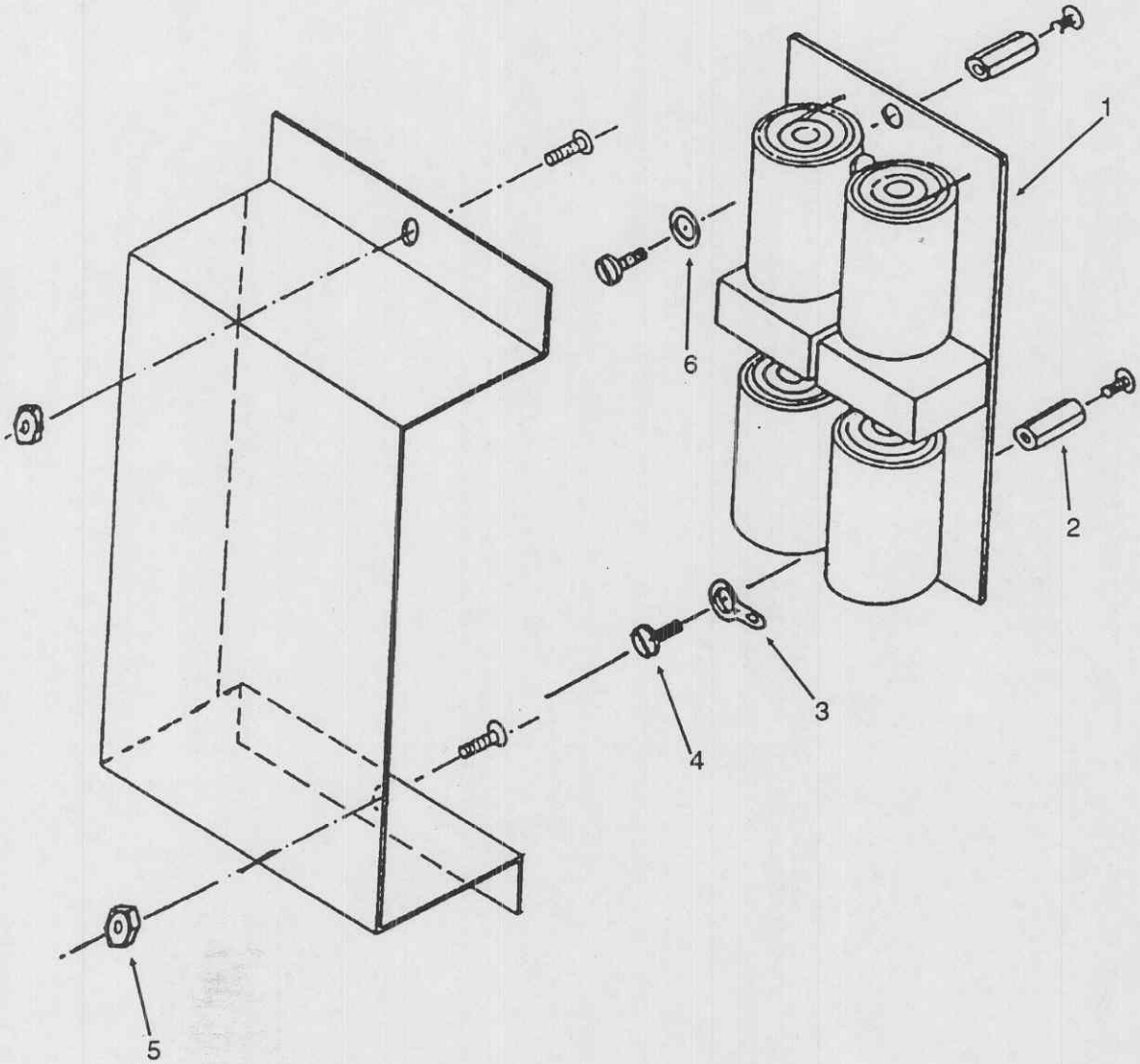

Figure E-4. EMI assembly.

Section II. REPAIR PARTS LIST FOR ULTRASONIC CLEANER

(1) ILLUSTRATION		(2) NATIONAL STOCK NUMBER	(3) DESCRIPTION	(4) UNIT OF MEASURE	(5) QTY
FIG NO.	ITEM NO.				
E-4	1	5915-01-266-6671	Suppressor, Electromagnetic Interference (31605) S430074	EA	1
E-4	2		Spacer, Aluminum, Hex, 6-32 by 5/8 in. (31605) 850628	EA	2
E-4	3		Lug, Solder, Internal Tooth (31605) 850001	EA	1
E-4	4		Screw, Machine, 6-32 by 3/8 in. (31605) 860002	EA	2
E-4	5		Nut, Hex, 6-32 (31605) 860021	EA	2
E-4	6		Washer, No. 6, Internal Tooth (31605) 860027	EA	2

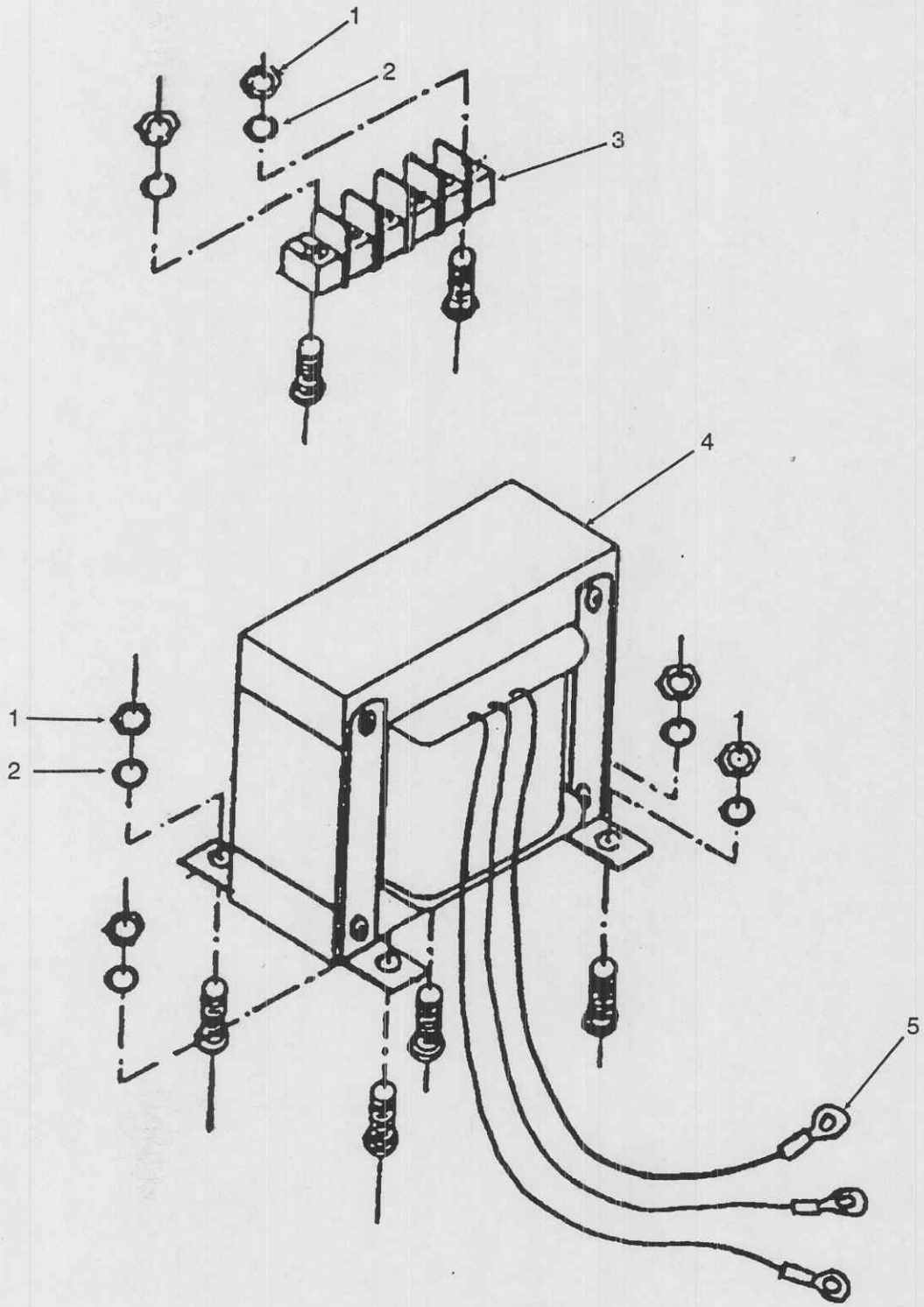

Figure E-5. Transformer.

Section II. REPAIR PARTS LIST FOR ULTRASONIC CLEANER

(1) ILLUSTRATION		(2) NATIONAL STOCK NUMBER	(3) DESCRIPTION	(4) UNIT OF MEASURE	(5) QTY
FIG NO.	ITEM NO.				
E-5	1		Nut, Hex, 6-32 (31605) 860022	EA	6
E-5	2		Washer, No. 6, Internal Tooth (31605) 860027	EA	6
E-5	3		Terminal Block (31605) 841514	EA	1
E-5	4	5950-01-264-9978	Transformer, Power (31605) 410104	EA	1
E-5	5		Lug, Ring, No. 6, Red (31605) 850016	EA	3

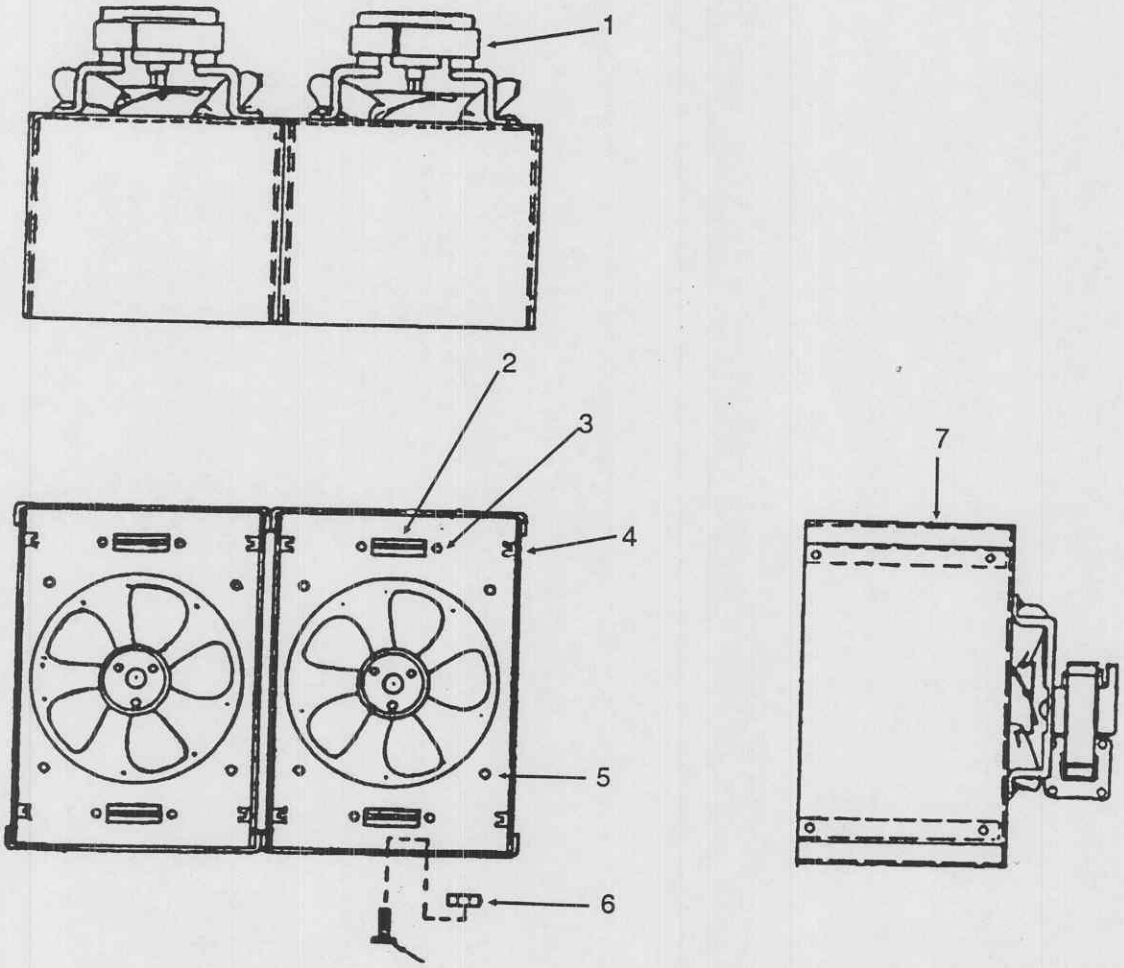

Figure E-6. Fan assemblies.

Section II. REPAIR PARTS LIST FOR ULTRASONIC CLEANER

(1) ILLUSTRATION		(2) NATIONAL STOCK NUMBER	(3) DESCRIPTION	(4) UNIT OF MEASURE	(5) QTY
FIG NO.	ITEM NO.				
E-6	1	4140-01-272-0219	Fan, Circulating (31605) 890007	EA	2
E-6	2		Cinch, Connector (31605) 840161	EA	4
E-6	3		Screw, Machine, 4-40 by 5/8 in. (31605) 860169	EA	8
			Washer, No. 4, External Tooth (31605) 860178	EA	8
			Nut, Hex, 4-40 (31605) 860171	EA	8
E-6	4		Glide, PCB (31605) 850131	EA	8
E-6	5		Screw, Machine, 6-32 by 3/8 in. (31605) 860002	EA	8
			Washer, No. 6, Internal Tooth (31605) 860127	EA	8
			Nut, Hex, 6-32 (31605) 860035	EA	8
E-6	6		Nut, Flexlock, 10-32 (31605) 860378	EA	2
E-6	7		Housing, Power Module (31605) T300811	EA	1

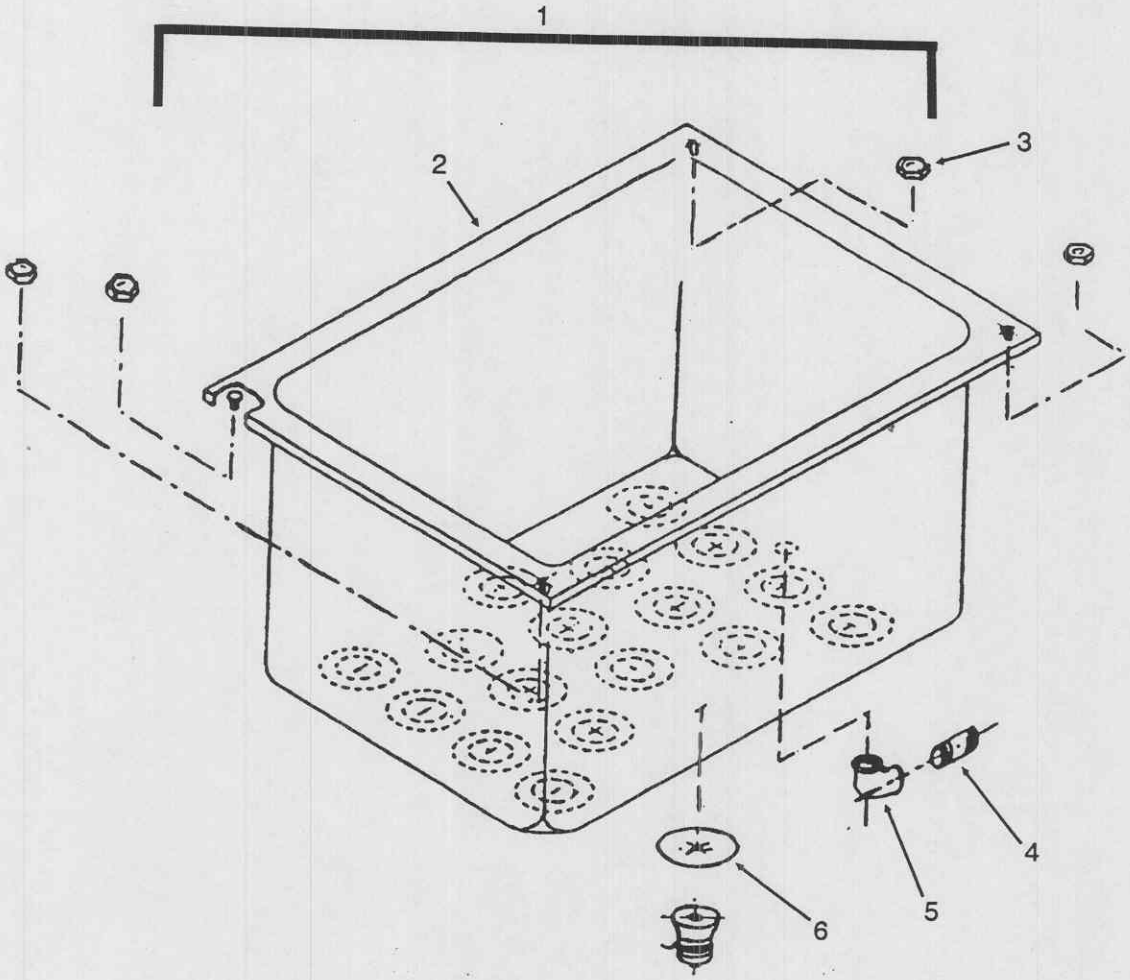

Figure E-7. Ultrasonic tank.

Section II. REPAIR PARTS LIST FOR ULTRASONIC CLEANER

(1) ILLUSTRATION		(2) NATIONAL STOCK NUMBER	(3) DESCRIPTION	(4) UNIT OF MEASURE	(5) QTY
FIG NO.	ITEM NO.				
E-7	1	4940-01-275-4787	Tank Assembly (31605) 5360521	EA	1
E-7	2		Tank (31605) F320161	EA	1
E-7	3		Nut, Hex, 8-32 (31605) 860235	EA	4
E-7	4		Nipple, Stainless Steel, 1 in. by 2 1/2 in. (31605) 610527	EA	1
E-7	5		Elbow, 1/2 in. npt (31605) Not Available	EA	1
E-7	6	5999-01-266-6668	Coupling Disk (31605) F590121	EA	18

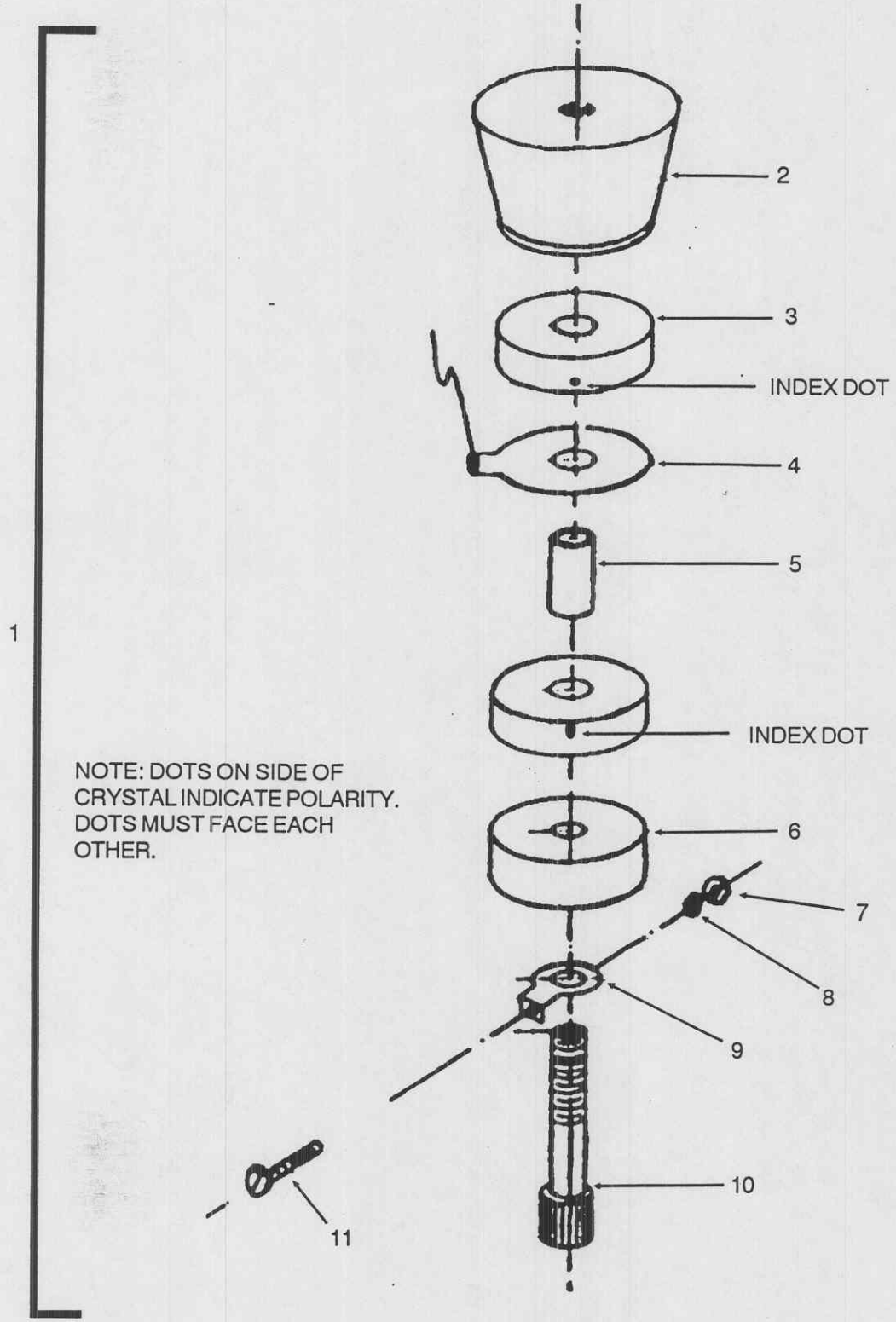

Figure E-8. Transducer.

Section II. REPAIR PARTS LIST FOR ULTRASONIC CLEANER

(1) ILLUSTRATION		(2) NATIONAL STOCK NUMBER	(3) DESCRIPTION	(4) UNIT OF MEASURE	(5) QTY
FIG NO.	ITEM NO.				
E-8	1	5845-01-266-7514	Transducer (31605) S590151	EA	18
E-8	2		Block, Radiating (31605) F590142	EA	18
E-8	3	5955-01-267-1458	Crystal, Ceramic (31605) 590002	EA	18
E-8	4		Electrode Assembly (31605) S590120	EA	18
E-8	5		Insulator (31605) F590130	EA	18
E-8	6		Block, Loading (31605) T590143	EA	18
E-8	7		Nut, Hex, 6-32 (31605) 850221	EA	18
E-8	8		Washer, No. 6, Internal Tooth (31605) 860127	EA	18
E-8	9		Lug, Ground (31605) F590149	EA	18
E-8	10		Bolt, Socket Head, 3/8-24 by 1 3/4 in. (31605) 590132	EA	18
E-8	11		Screw, Machine, 6-32 by 1/4 in. (31605) 860101	EA	18

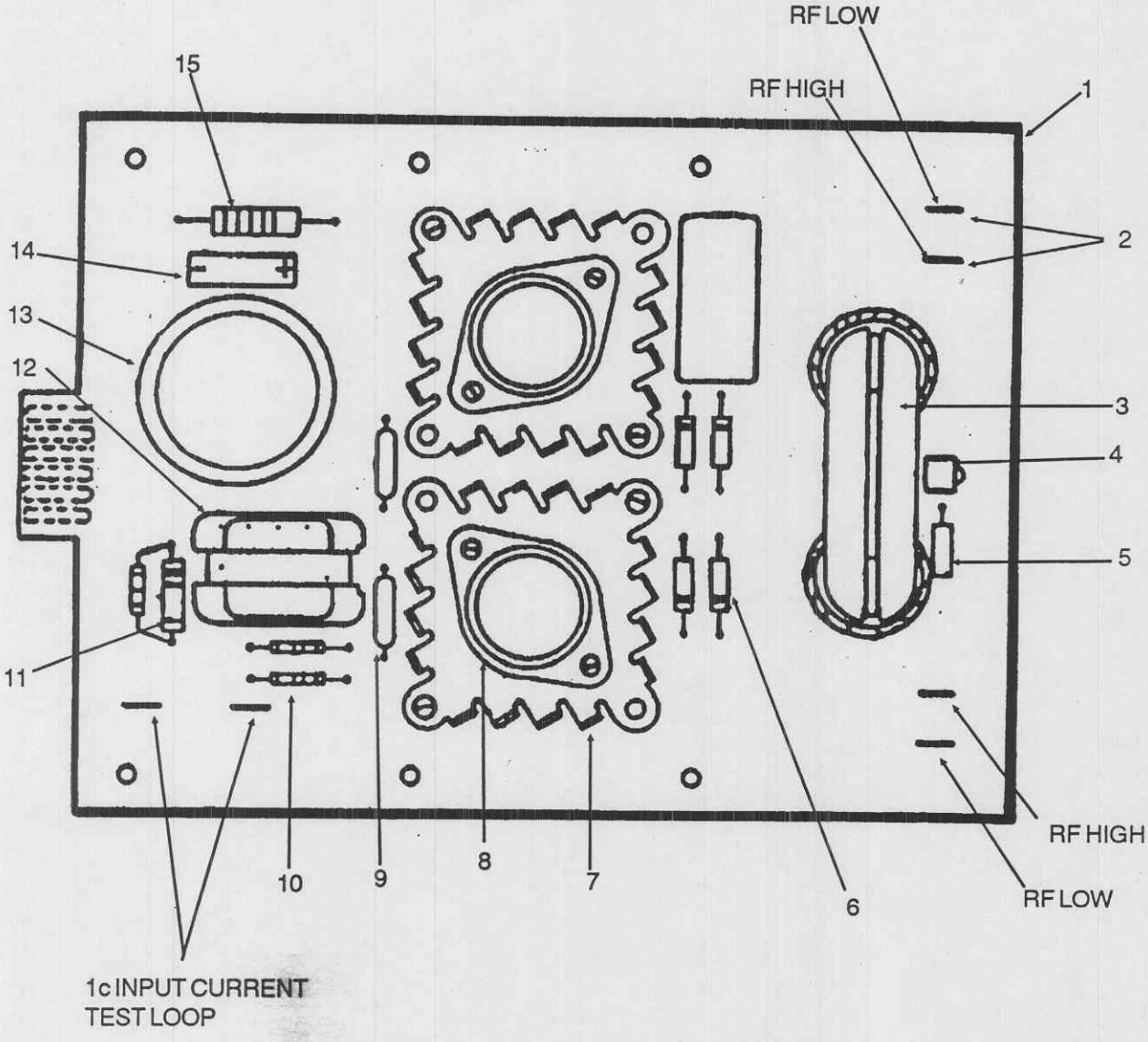

Figure E-9. Power module.

Section II. REPAIR PARTS LIST FOR ULTRASONIC CLEANER

(1) ILLUSTRATION		(2) NATIONAL STOCK NUMBER	(3) DESCRIPTION	(4) UNIT OF MEASURE	(5) QTY
FIG NO.	ITEM NO.				
E-9	1	5999-01-265-0041	Printed Circuit Board (Power Module) (31605) S420475	EA	3
E-9	2		Lug, Quick-Disconnect, Male (31605) Not Available	EA	18
E-9	3	5950-01-266-6669	Transformer Assembly (Output) (31605) S480308	EA	3
E-9	4	5980-01-274-0916	LED (31605) 800119	EA	3
E-9	5		Resistor, 68-ohm, 1/2-watt (31605) Not Available	EA	3
E-9	6	5961-01-274-0915	Semiconductor Device, Diode (Zener) (31605) 800422	EA	12
E-9	7		Heat Sink (31605) 310221	EA	6
E-9	8	5961-01-272-0220	Transister (31605) 800630	EA	6
E-9	9	5910-01-270-5954	Capacitor, 0.022-mF (31605) 520043	EA	9
E-9	10		Resistor, 27-ohm, 1/2-watt (31605) 810127	EA	6
E-9	11		Resistor, 22-ohm, 1/2-watt (31605) 810111	EA	3
E-9	12	5950-01-266-6670	Transformer Assembly (Input) (31605) S480338	EA	3
E-9	13	5910-01-272-1993	Capacitor, 470-mF (31605) 520082	EA	3
E-9	14	5915-01-275-1282	Rectifier Network (31605) 800446	EA	3
E-9	15	5905-01-277-7908	Resister, Current Regulating (31605) 810154	EA	3
E-9	16	5910-01-267-6085	Capacitor, 0.015-mF (31605) 520036	EA	3

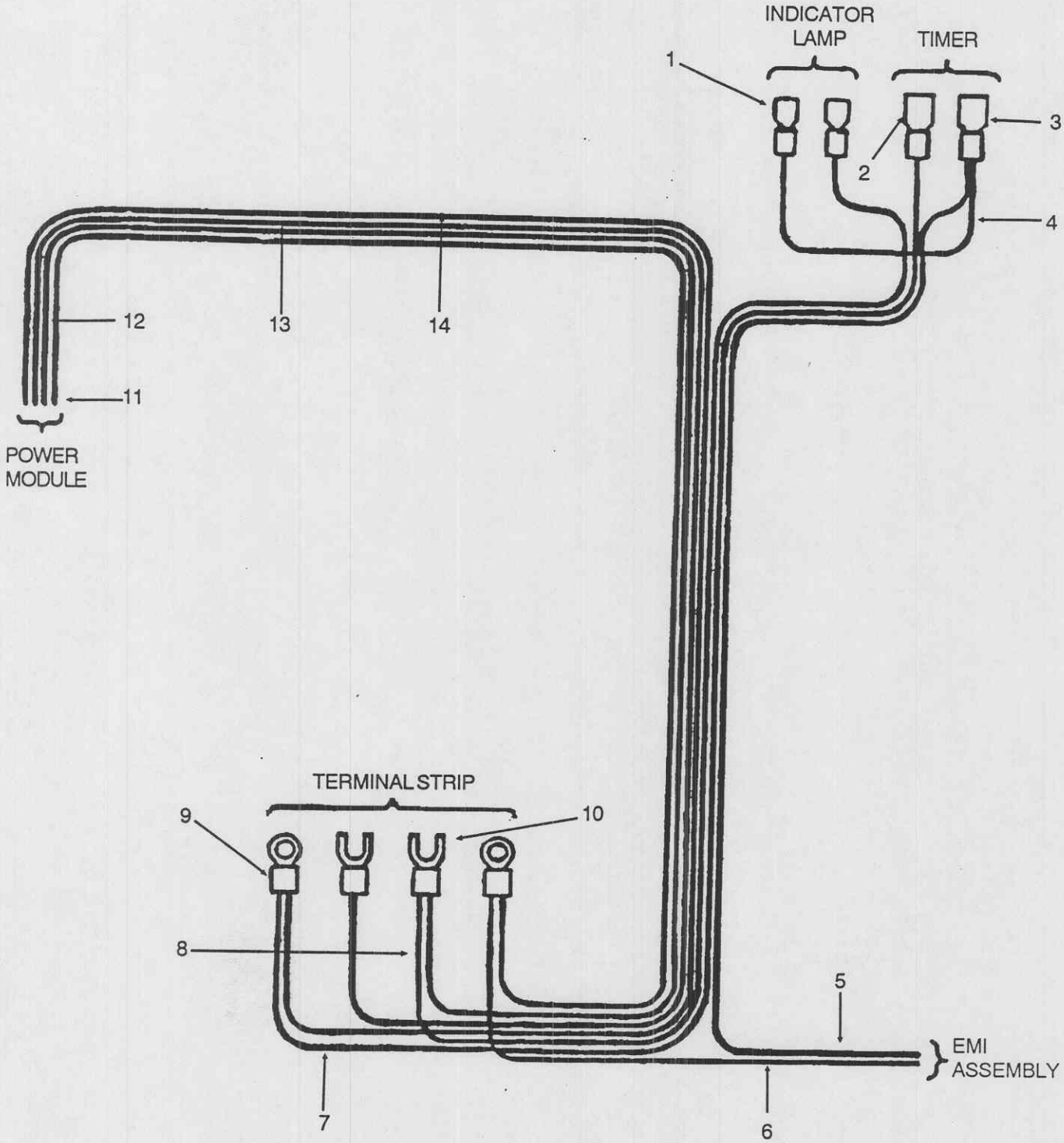

Figure E-10. Wiring harness.

Section II. REPAIR PARTS LIST FOR ULTRASONIC CLEANER

(1) ILLUSTRATION		(2) NATIONAL STOCK NUMBER	(3) DESCRIPTION	(4) UNIT OF MEASURE	(5) QTY
FIG NO.	ITEM NO.				
E-10	1		Lug, Red, Female, Quick-disconnect, 0.187 in. (31605) 850013	EA	2
E-10	2		Lug, Red, Female, Quick-disconnect, 0.250 in. (31605) 850019	EA	1
E-10	3		Lug, Blue, Female, Quick-disconnect, 0.250 in. (31605) 850024	EA	1
E-10	4		Wire, Black, 22-gauge, 6 in. (31605) None	EA	1
E-10	5		Wire, Black, 18-gauge, 36 in. (31605) None	EA	1
E-10	6		Wire, White, 18-gauge, 17 in. (31605) None	EA	1
E-10	7		Wire, Black, 18-gauge, 40 in. (31605) None	EA	1
E-10	8		Wire, Red, 22-gauge, 32 in. (31605) None	EA	1
E-10	9		Lug, Blue, Ring, No. 6 (31605) None	EA	2
E-10	10		Lug, Red, Spade, No. 6 (31605) 850016	EA	2
E-10	11		Wire, White, 18-gauge, 40 in. (31605) None	EA	1
E-10	12		Wire, Red, 18-gauge, 40 in. (31605) None	EA	1
E-10	13		Wire, Gray, 18-gauge, 40 in. (31605) None	EA	1
E-10	14		Wire, Black, 18-gauge, 31 in. (31605) None	EA	1

Section II. REPAIR PARTS LIST FOR ULTRASONIC CLEANER

(1) ILLUSTRATION		(2) NATIONAL STOCK NUMBER	(3) DESCRIPTION	(4) UNIT OF MEASURE	(5) QTY
FIG NO.	ITEM NO.				
N/A	1	5950-01-267-0917	C-core, Ferite (31605) 490504	EA	3
N/A	2	5950-01-266-6672	Coil, Output, Secondary (31605) S480469	EA	3
N/A	3	5950-01-266-6673	Coil, Output, Primary (31605) S480418	EA	3
N/A	4	5970-01-276-4562	Insulation Sleeving (Short) (31605) 850671	EA	3
N/A	5	5970-01-275-1269	Insulation Sleeving (Long) (31605) 850672	EA	3
N/A	6	5940-01-012-1791	Insulator Plate (31605) 801613	EA	3
N/A	7		Plate (Aluminum) (31605) F310046	EA	3
N/A	8		U-bracket, Brass (31605) 860076	EA	3

Section III. SPECIAL TOOLS, TEST, AND SUPPORT EQUIPMENT FOR ULTRASONIC CLEANER

(1) ITEM NO.	(2) LEVEL	(3) NATIONAL STOCK NUMBER	(4) DESCRIPTION	(5) UNIT OF MEASURE	(6) QTY
1	D		Wrench, Torque (1CV05) 6065-4	EA	1
2	D		Holder, Bit, Hex (1CV05) 6930	EA	1
3	D		Bit, Hex (1CV05) 4987B	EA	1

GLOSSARY

AC	Alternating current.
amp	Ampere.
Amp/cm	Ampere per centimeter.
BX	Box.
C	Operator maintenance.
CAGE	Commercial and government entity.
CH1	Channel 1.
CH2	Channel 2.
D	Depot level maintenance.
DC	Direct current.
°C	Degrees Celsius.
°F	Degrees Fahrenheit.
dia	Diameter.
DS	Direct support.
EA	Each.
EMI	Electromagnetic interference.
F	Direct support maintenance.
F1/F2	Fuse (fig 3-1).
Fig. No.	Figure number.
FM	Fan motor (fig 3-1).
FSCM	Federal supply code for manufacturers. (Obsolete term; see CAGE).
FT	Foot (feet).
gal	Gallon.
GS	General support.
H	General support maintenance.
hex	Hexagonal.
Hz	Hertz (cycles per second).
in.	Inch.
ISO	International Standards Organization.
kHz	Kilohertz.
LED	Light emitting diode.
LZT	Lead zirconate titanite.
MAC	Maintenance allocation chart.
MEDSOM	Medical supply, optical, and maintenance.
mF	Millifarad.
MTOE	Modified table of organization and equipment.

No.	Number.
npt	National pipe thread.
NSN	National stock number.
O	Unit maintenance.
PCB	Printed circuit board.
PL	Indicator lamp (fig 3-1).
PM	Power module (fig 3-1).
PMCS	Preventive maintenance checks and services.
PT	Pint.
Q	Quarter.
QA	Quality assurance.
QC	Quality control.
QTY	Quantity.
RF	Radio frequency (fig 4-1, 4-2).
RO	Roll.
RX	Reparable exchange.
T	Timer (fig 3-1).
T1	Transformer (Fig 3-1).
TB	Terminal block (Figure 3-1).
TB	Technical bulletin.
TR	Transducer (fig 3-1).
µS/CM	Microseconds per centimeter.
V/CM	Volts per centimeter.
V	Volts.
VAC	Volts alternating current.

Index

This index is organized alphabetically by topic and by subtopic within a topic. Topics and subtopics are identified by paragraph number.

Administrative storage, 1-5
Auxiliary equipment, 2-4
Basic issue items, 3-3
Bracket, shipping, 2-1, 3-7
Caster assembly
  Dimensions, 1-13
  Installation, 3-16
  Lubrication, 3-10
  Removal, 3-16
Caution, 2-1, 3-7, 3-23, 3-24, 4-6, 4-7, 4-13
Cavitation, 1-17, 2-2
Cleaning solutions, 1-18, 2-1, 2-2
Common names, 1-8
Complaints, medical materiel, 1-9
Components of end item, 3-3
Deficiencies, reporting, 3-12
Degassing, 2-1, 3-14
Desiccant, 3-24
Destruction of Army materiel, 1-4
Electrical connections, 3-7
EMI assembly
  Installation, 3-19
  Removal, 3-19
Equipment
  Characteristics, capabilities, and features, 1-11
  Cleaning factors, 2-2
  Components, 1-12
  Control functions, 1-16
  Differences, 1-14
  Dimensions, 1-13
  Inspection, 3-7
  Materials, 1-13
  Operation, 3-7

Schematic, 3-14, 4-4
Servicing, 3-7
Shipment, 3-24
Shutdown procedures, 2-1
Specifications, 1-13
Sounds, 2-1
Unpacking, 3-7
Wiring harness, 3-14
Expendable supplies, 3-4
Fan
Installation, 3-22
Lubrication, 3-9
Removal, 3-22
Forms and Records, 1-3
Frequencies, 1-13
Fuses, 1-13
Grounding, 1-13, 2-1
Identification plates, 1-13
Indicator lamp
Installation, 3-17
Removal, 3-17
Interval
PMCS, 3-11
Testing, 3-13
Maintenance functions, 3-1
Materials, packing, 3-7
Material processing procedures, 2-3
Model differences, 1-14
Nomenclature cross-reference, 1-8
Note, 2-1, 2-2, 3-7, 3-10, 3-11, 3-16, 3-19, 3-20, 3-21, 3-22, 3-24, 4-4, 4-6, 4-12, 4-13
Official nomenclature, 1-8
Power modules
Characteristics, 1-13
Component replacement, 4-7
Description, 4-3
Normal operation, 4-5
Repair, 4-8
Theory of operation, 4-4

Troubleshooting, 4-6
Preventive maintenance checks and services, 3-11
Printed circuit boards
Installation, 3-21
Removal, 3-21
Procedures, initial operation, 2-1, 2-3
Purpose of equipment, 1-1
Quality assurance or quality control, 1-7
Repair parts, 3-5
Safety, care, and handling, 1-15
Shipping bracket, 2-1, 3-7, 3-24
Solution, cleaning, 1-18, 2-1, 2-2
Special tools, 3-6
Storage
Administrative, 1-5, 3-24
Preparation, 3-24
Styrofoam, 3-7
Tank
Capacity, 1-13
Installation, 3-23
Removal, 3-23
Temperatures, 2-2, 2-5
Test equipment, 3-2
Theory of operation, 4-10
Timer
Characteristics, 1-13, 1-16
Installation, 3-18
Removal, 3-18
Tools, 3-2, 3-6
Torch, propane, 4-13
Torque wrench, 4-12
Transducers
Description, 1-2, 4-9
Installation, 4-13
Removal, 4-13
Transformer
Installation, 3-20
Removal, 3-20

Troubleshooting
  Support level, 4-6
  Unit level, 3-14
Type of manual, 1-1
Ultrasonic wave generation, 1-17
Valve, drain, 1-12, 3-7
Ventilation louvers, 1-12, 1-15
Voltage, 1-11, 1-13, 3-7
Warning, 2-1, 3-7, 3-11, 3-24, 4-4, 4-6, 4-7
Warranty, 1-10

By Order of the Secretary of the Army:

CARL E. VUONO
General, United States Army
Chief of Staff

Official:

THOMAS F. SIKORA
Brigadier General, United States Army
The Adjutant General

Distribution:

To be distributed in accordance with DA Form 12-34-E, block 4260, Unit, Direct Support, and General Support Maintenance requirements for TM 8-6530-005-24&P.

RECOMMENDED CHANGES TO EQUIPMENT TECHNICAL PUBLICATIONS

THEN. . JOT DOWN THE DOPE ABOUT IT ON THIS FORM. CAREFULLY TEAR IT OUT. FOLD IT AND DROP IT IN THE MAIL!

SOMETHING WRONG WITH THIS PUBLICATION?

FROM (PRINT YOUR UNIT'S COMPLETE ADDRESS)
Cdr, USABBD
Maintenance Shop
Frederick, MD 21701

DATE SENT
1 Feb 89

PUBLICATION NUMBER	PUBLICATION DATE	PUBLICATION TITLE
TM 8-6530-005-24&P	15 Nov 88	Ultrasonic Cleaner

BE EXACT. PIN-POINT WHERE IT IS

PAGE NO	PARA-GRAPH	FIGURE NO	TABLE NO
4-9	4-16		
E-5			

IN THIS SPACE TELL WHAT IS WRONG AND WHAT SHOULD BE DONE ABOUT IT:

Change masking tape to electrical tape.

REASON: Electrical tape should be used.

Change CAGE code on number 8 to (31605).

REASON: Corrects typographical error.

SAMPLE

PRINTED NAME, GRADE OR TITLE, AND TELEPHONE NUMBER
JOHN DOE, SP4, Maintenance Specialist
AUTOVON 343-XXXX

SIGN HERE
John Doe

DA FORM 1 JUL 79 2028-2 PREVIOUS EDITIONS ARE OBSOLETE.

☆U.S. Government Printing Office: 1986—491-003/30523

P.S.--IF YOUR OUTFIT WANTS TO KNOW ABOUT YOUR RECOMMENDATION MAKE A CARBON COPY OF THIS AND GIVE IT TO YOUR HEADQUARTERS

CUT ALONG PERFORATED LINE

RECOMMENDED CHANGES TO EQUIPMENT TECHNICAL PUBLICATIONS

THEN. . JOT DOWN THE DOPE ABOUT IT ON THIS FORM. CAREFULLY TEAR IT OUT. FOLD IT AND DROP IT IN THE MAIL!

SOMETHING WRONG WITH THIS PUBLICATION?

FROM: (PRINT YOUR UNIT'S COMPLETE ADDRESS)

DATE SENT

PUBLICATION NUMBER	PUBLICATION DATE	PUBLICATION TITLE
TM 8-6530-005-24&P		Ultrasonic Cleaner

BE EXACT PIN-POINT WHERE IT IS

PAGE NO	PARA-GRAPH	FIGURE NO	TABLE NO

IN THIS SPACE TELL WHAT IS WRONG AND WHAT SHOULD BE DONE ABOUT IT:

PRINTED NAME, GRADE OR TITLE, AND TELEPHONE NUMBER

SIGN HERE.

CUT ALONG PERFORATED LINE

DA FORM 1 JUL 79 2028-2

PREVIOUS EDITIONS ARE OBSOLETE.

☆U.S. Government Printing Office: 1986—491-003/50523

P.S.--IF YOUR OUTFIT WANTS TO KNOW ABOUT YOUR RECOMMENDATION MAKE A CARBON COPY OF THIS AND GIVE IT TO YOUR HEADQUARTERS.

REVERSE OF DA FORM 2028-2

FILL IN YOUR UNIT'S ADDRESS

FOLD BACK

DEPARTMENT OF THE ARMY

OFFICIAL BUSINESS
PENALTY FOR PRIVATE USE $300

POSTAGE AND FEES PAID
DEPARTMENT OF THE ARMY
DOD 314

U.S. MAIL

CUT ALONG PERFORATED LINE

Commander
U.S. Army Medical Materiel Agency
ATTN: SGMMA-M
Frederick, Maryland 21702-5001