MMS LABORATORY GENERAL 84 BED EQUIPMENT SET

Support and Consumables Handbook

6545-01-524-6157
UA N503
LIN M73482
REVISED

March 2007

U.S. Army Medical Materiel Agency

The information contained in this manual was prepared
by the U.S. Army Medical Materiel Agency,
Materiel Acquisition Directorate,
Ancillary Care Division,
Fort Detrick, MD

This manual is still in draft form and may contain inaccuracies. To report inaccuracies or additions, please contact 301-619-4301/4316, DSN 343-4301/4316, or at45HUSAMMACRM@amedd.army.mil Responses may also be mailed to:

Commander
U.S. Army Medical Materiel Agency
MCMR-MM0-AC
1423 Sultan Drive, Suite 100
Fort Detrick, MD 21702-5001

NOTE: CLICK ON TITLE FOR DIRECT LINK

TABLE OF CONTENTS

SECTION NO.	DEVICE	NSN	PAGE NO.
1	ANALYZER BLOOD GAS, I-STAT	(J) 6630-01-526-7377	1
2	ANALYZER COAG PTBL HEMOCHRON SIGNATURE JR	(J) 6630-01-519-3589	7
3	ANALYZER HEMATOLOGY, COULTER, ACT-10	(J) 6630-01-468-9142	11
4	ANALYZER URINE CHEMIS, CLINITEK 500	(J) 6630-01-526-7373	17
5	CHEMISTRY ANALYZER FIELD, W/CASE, PICCOLO	(J) 6630-01-497-7291	21
6	CENTRIFUGE LAB 16800 RPM 60 HZ MULTIPURPOSE	(J) 6640-01-499-0533	25
7	CENTRIFUGE LABORATORY 3400 RPM 110/220	(J) 6640-01-416-7345	29
8	CHOLINESTERASE TEST SYSTEM	(L) 6630-01-462-4878	31
9	CLEANER VACUUM ELECTRIC,	(J) 7910-01-327-0757	33
10	METER TRIAGE	(L) 6640-01-493-9162	37
11	MICROSCOPE OPTICAL LAB GENERAL PURPOSE	(J) 6650-01-519-8473	41
12	REFRACTOMETER HAND	(L) 6650-00-933-3218	45
13	REFRIGERATOR BLOOD COOLING& STORAGE FIELD ENVIRONMENT	(J) 4110-01-506-0895	47
14	REFRIGERATOR-FREEZER, MECHANICAL FIELD WARD	(J) 4110-01-425-8009	51
15	SINK UNIT SURG SCRUB	(J) 6530-01-429-6715	53

ANALYZER BLOOD GAS W/HARD CASE I-STAT TOC

ABBOTT LABORATORIES INC
MODEL # 04J48-20
Manufacturer's Phone: (609) 443-9300 FAX: (609) 443-9310
Website: http://www.abbott.com

AAC "J" ITEM NSN 6630-01-526-7377

UA's: 3263, 3267, 4905, 4912, 5267, 9410, N303, N503, N703

USAMMA POC: Materiel Acquisition Directorate, 301-619-7403, DSN 343-7403
UNIT PRICE: $11,589.07

System Description: Point-of-use blood analyzer for the measurement of blood gases and electrolytes. Utilizes 2 to 3 drops of fresh whole blood in a disposable test cartridge that is inserted into the handheld analyzer. The cartridge self-calibrates miniaturized sensors upon insertion into the analyzer. Results are displayed in less than 2 minutes. Records and automatically stored (up to 50) for printing and/or transmission. A daily quality control of less than 60 seconds is required. Upon completion, all blood and calibrant fluid is contained within the cartridge for safe bio-hazard disposal.

Tests performed:

1) **Glu - Glucose**
2) **pH -**
3) **pCO_2**
4) **Bicarbonate**
5) **Total carbon dioxide**
6) **Base excess**
7) **Sodium**
8) **Potassium**
9) **Chloride**
10) **Urea nitrogen**
11) **Hematocrit**
12) **Hemoglobin**
13) **Anion**

Features:

- **Point-of-use capability.**
- **Weight reduction I-STAT – 18 oz).**
- **Battery backup (12 VDC).**
- **Extensive array of cartridge-based panels.**
- **Small sample size, I-STAT – 65 µL).**

i-STAT
1
2
3
4
5
6
7
8
9
*
0
CLR
ENT
PRT
DIS
PROPOFOL, THIOPENTAL SODIUM, &
HYDROXYUREA CAUSE INTERFERENCE.
SEE MANUAL FOR COMPLETE
INTERFERENCE INFORMATION.
37°

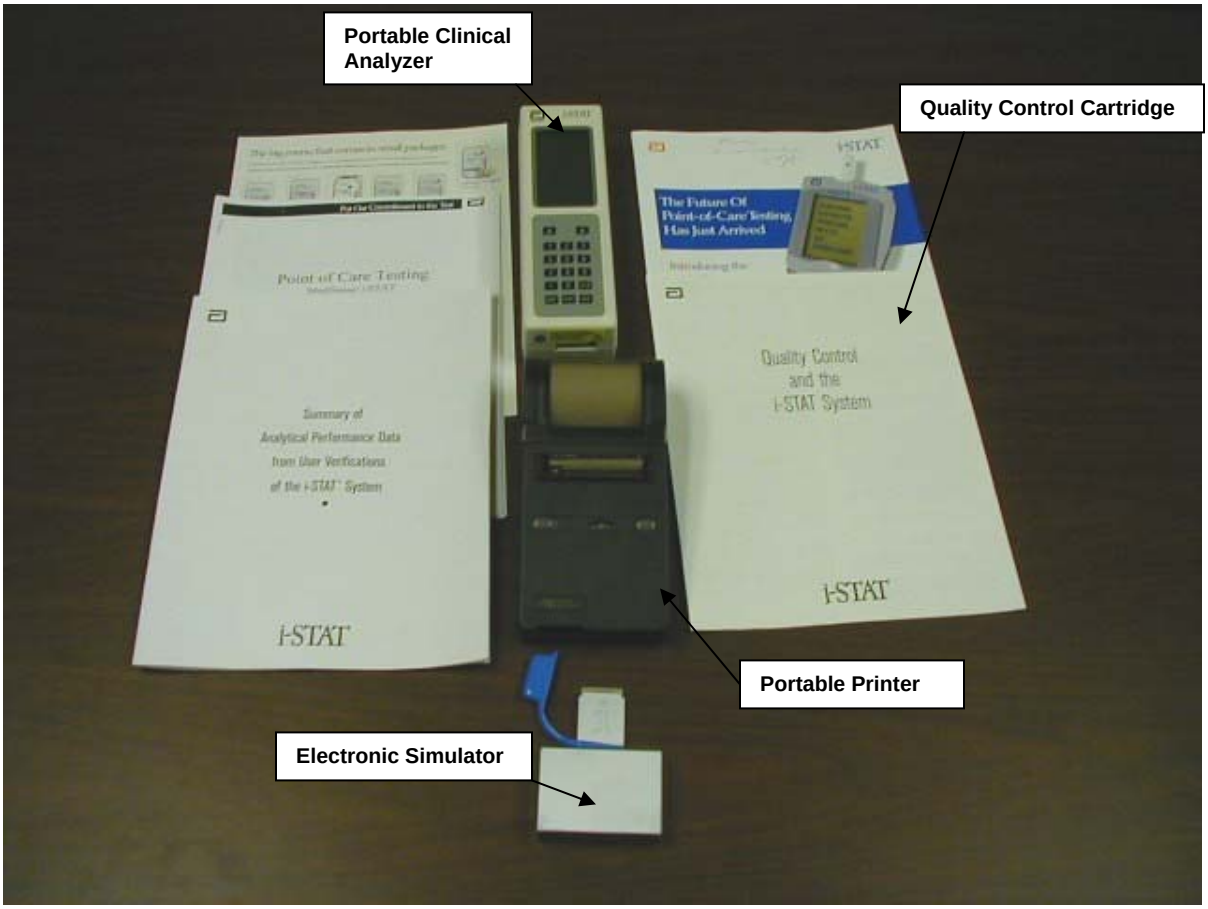

i-STAT PHYSICAL AND ENVIRONMENTAL SPECIFICATIONS

Analyzer Dimensions	**Height, in.**	**8.26**
	Width, in.	**2.52**
	Depth, in.	**2.05**
Weight, oz.	**18.34**	
Analyzer Operating Temperature	**64° to 86°F**	
Analyzer Transport Temperature	**14° to 122°F**	
Humidity Non-condensing	**0 to 90%**	
Power Requirements	**Two 9-volt batteries**	

i-STAT ACCESSORIES (START-UP) PACKAGE

NSN	NOTES	Nomenclature	PN	QTY	UI	Unit Price	Total Price	MFG	Shelf Life, months	Refrig Y/N	CONUS Ship Time, weeks
6630014222097	Included w/ NSN	ELECTRONIC SIMULATOR QUALITY CONTROL TEST CLINICAL ANALYZER	06F11-01	1	EA	$425.25	$425.25	ABBOTT LABS	More than 60 days	N	3
6630015264091	Included w/ NSN	PRINTER ANALYZER PORTABLE	06F2391	1	EA	$291.20	$291.20	ABBOTT LABS	Indef.	N	3
6640014195698	Included w/ NSN	PAPER RECORDING CLINICAL ANALYZER USE W/HEWLETT PACKARD PTBL 6S	06F17-11	1	6PG	$14.70	$14.70	ABBOTT LABS	Indef.	N	3
6630015263620	Included w/ NSN	Dowloader/Recharger Serial	06F23-45	1	EA	$546.25	$546.25	ABBOTT LABS	Indef.	N	3
6630015243128	Included w/ NSN	CARTRIDGE CERAMIC IST	04J51-01	1	EA	$1.00	$1.00	ABBOTT LABS	Indef.	N	3
6135014217168	Included w/ NSN	BATTERY 9 VOLT NONRECHARGEABLE USED IN HAND-HELD BLOOD GAS ANALYZER	6F2126	1	6PG	$$70.00	$70.00	I-STAT CORP	Indef.	N	3
6630015264098	Included w/ NSN	BATTERY ANALYZER RECHARGEABLE	06F23-55	1	EA	$42.96	$42.96	ABBOTT LABS	Indef.	N	3
6630015264102	Included w/ NSN	CARRY CASE ANALYZER	06F16-79	1	EA	$1715.48	$1715.48	ABBOTT LABS	Indef.	N	3
7610015074390	Included w/ NSN	MANUAL TECHNICAL OPERATOR'S MANUAL	06F16-30	1	EA	$25.00	$25.00	ABBOTT LABS	Indef.	N	3
6630014878851	Included w/ NSN	KIT PC DOWNLOAD	06F22-16	1	EA	$350.00	$350.00	I-STAT CORP	Indef	N	3
7610015225863	Included w/ NSN	SYSTEM MANUAL (MODEL 200)	06F20-01	1	EA	$78.75	$78.75	ABBOTT LABS	Indef.	N	3
5975014195735	Included w/ NSN	ADAPTER, AC/DC, PORTABLE PRINTER	06F17-12	1	EA	$17.190	$17.19	ABBOTT LABS	Indef.	N	3
7610015225865	Included w/ NSN	IMPLEMENTATION GUIDE	63400	1	EA	$1.00	$1.00	ABBOTT LABS	Indef.	N	3
6630015221706	Included w/ NSN	HARDENED CASE	06F16-77	1	EA	$1,716.77	$1,716.77	ABBOTT LABS	Indef.	N	3

ITEMS FOUND IN THE UNIT ASSEMBLAGE SUPPORTING THE I-STAT

NSN	NOTES	Nomenclature	PN	QTY	UI	Unit Price	Total Price	MFG	Shelf Life, months	Refrig Y/N	CONUS Time, we
6550014318279	IN THE UA PUSH PACKAGE	CONTROL BLD CHEM U/W G E3+ G3+ EC4+ 6+ EG6+ EC6+ & EC8 1.7ML	06F12-01	1	PG	$27.48	$27.48	ABBOTT LABS	6	Y	3
6550014323696	IN THE UA PUSH PACKAGE	CONTROL BLD CHEM USE W/G E3+ G3+ EC4+ 6+ EG6+ EC6+ EC8 1.7ML	06F14-01	1	PG	$11.85	$11.85	ABBOTT LABS	6	Y	3
6550014338679	IN THE UA PUSH PACKAGE	TEST PACK SOD K CHL PH PARTIAL PRESSURE CO2 BLD UREA...DETR	06F04-01	3	PG	$6.91	$20.73	ABBOTT LABS	2	Y	3
6550014066428	IN THE UA PUSH PACKAGE	TEST PACK PH PARTIAL PRESSURE CARBON DIOXIDE	06F03-01	3	PG	$368.97	$1,106.91	ABBOTT LABS	6	Y	3
6550014338681	IN THE UA PUSH PACKAGE	TEST PACK SOD POTASSIUM K BLD UREA NITROGEN GLUCOSE&HEMATOCRIT	06F05-01	5	PG	$437.81	$2189.05	ABBOTT LAB	2	Y	3
6550014199475	IN THE UA PUSH PACKAGE	TEST PACK SODIUM K IONIZED CALCIUM PH PARTIAL PRESSURE C02	06F01-01	3	PG	$247.00	$741.00	ABBOTT LABS	6	Y	3
6550015064913	IN THE UA PUSH PACKAGE	CARTRIDGE TEST GLUCOSE	06F09-01	2	PG	$216.01	$432.02	ABBOTT LABS	0	Y	3
6550015344571	IN THE UA PUSH PACKAGE	CONTROL BLOOD CHEMISTRY	06F12-04	1	PG	$34.13	$34.13	ABBOTT LABS	18	Y	3
6550015344595	IN THE UA PUSH PACKAGE	CONTROL BLOOD CHEMISTRY	06F12-06	1	PG	$34.13	$34.13	ABBOTT LABS	0	Y	3

i-STAT CONSUMABLES (RESUPPLY) PACKAGE

NSN	Nomenclature	PN	QTY	UI	Unit Price	Total Price	MFG	Shelf Life, months	Refrig Y/N	CONUS Ship Time, weeks	NOTES
6135009857845	BATTERY NONRECHARGEABLE ALKALINE AA 1.5V 1 YEAR SHELF LIFE	C18.1	1	24sPG	$7.52	$7.52	AMERICAN NATIONAL	36	N	3	AA FOR PRINTER
6135014217168	BATTERY 9 VOLT NONRECHARGEABLE USED IN HAND-HELD BLOOD GAS ANALYZER	6F2126	1	12S/ PG	$70.00	$70.00	I-STAT	Indef.	N	3	LITHIUM
6640014195698	PAPER RECORDING CLINICAL ANALYZER USE W/HEWLETT PACKARD PTBL 6S	06F-1711	1	PG	$15.40	$15.40	I-STAT	Indef.	N	3	
6550014318279	CONTROL BLD CHEM U/W G E3+ G3+ EC4+ 6+ EG6+ EC6+ & EC8 1.7ML	06F12-01	1	PG	$27.48	$27.48	ABBOTT LABS	6	Y	3	All test pks will last only 2 wks at room temp if not refrig
6550014323696	CONTROL BLD CHEM USE W/G E3+ G3+ EC4+ 6+ EG6+ EC6+ EC8 1.7ML	06F14-01	1	PG	$11.85	$11.85	ABBOTT LABS	6	Y	3	All test pks will last only 2 wks at room temp if not refrig
6550014338679	TEST PACK SOD K CHL PH PARTIAL PRESSURE CO2 BLD UREA...DETR	06F04-01	3	PG	$6.91	$20.73	ABBOTT LABS	2	Y	3	All test pks will last only 2 wks at room temp if not refrig
6550014066428	TEST PACK PH PARTIAL PRESSURE CARBON DIOXIDE	06F03-01	3	PG	$368.97	$1,106.91	ABBOTT LABS	6	Y	3	All test pks will last only 2 wks at room temp if not refrig
6550014338681	TEST PACK SOD POTASSIUM K BLD UREA NITROGEN GLUCOSE&HEMATOCRIT	06F05-01	5	PG	$437.81	$2189.05	ABBOTT LAB	2	Y	3	All test pks will last only 2 wks at room temp if not refrig
6550014199475	TEST PACK SODIUM K IONIZED CALCIUM PH PARTIAL PRESSURE C02	06F01-01	3	PG	$247.00	$741.00	ABBOTT LABS	6	Y	3	All test pks will last only 2 wks at room temp if not refrig
6550015064913	CARTRIDGE TEST GLUCOSE	06F09-01	2	PG	$216.01	$432.02	ABBOTT LABS	0	Y	3	All test pks will last only 2 wks at room temp if not refrig
6550015344571	CONTROL BLOOD CHEMISTRY	06F12-04	1	PG	$34.13	$34.13	ABBOTT LABS	18	Y	3	All test pks will last only 2 wks at room temp if not refrig
6550015344595	CONTROL BLOOD CHEMISTRY	06F12-06	1	PG	$34.13	$34.13	ABBOTT LABS	180	Y	3	All test pks will last only 2 wks at room temp if not refrig

ANALYZER COAGULATION PORTABLE, HEMOCHRON SIGNATURE JR
TOC

INTERNATIONAL TECHNIDYNE CORP
MODEL # HE-SIG
Manufacturer's Phone: (817)-875-4061) FAX:(301) 824-7099
Website: http://www.itcmed.com/hemochron.shtml

AAC "W" ITEM NSN 6630-01-496-8099
AAC "J" ITEM NSN 6630-01-519-3589

UA's: 9303, F303, N303, N503, N703

USAMMA POC: Materiel Acquisition Directorate, 301-619-7403, DSN 343-7403UNIT PRICE: $6,853.21

System Description: The HEMOCHRON® Jr. Signature Microcoagulation System performs rapid coagulation tests at the patient bedside with just one drop (.015cc) of fresh whole blood. In addition to being a portable, hand-held, battery-operated instrument, the HEMOCHRON Jr. Signature also offers essential data management capabilities and print (optional) both patient and quality control test results. An operator lockout feature is also available to limit instrument usage to authorized users.

Features:

- Performs rapid and accurate tests within minutes
- Data management capabilities include tagging test results with date, time, operator ID, and/or patient ID
- Offers liquid and electronic quality controls

Test Menu:
- PT
- APTT

HEMOCHRON SIGNATURE JR.

ANALYZER COAGULATION
PHYSICAL AND ENVIRONMENTAL SPECIFICATIONS

Dimensions	**Height**	**2”**
	Width	**7.5”**
	Depth	**3.5”**
	Cube	**.030 cu ft**
Weight		**.7 lbs**
Operating Temperature Range		**37 °C ±1.0 °C**
Storage Temperature Range		**37 °C ±1.0 °C**
Relative Humidity (in use)		**95% noncondensing**
Power Requirements		**Nickel Cadmium 3 volt (CR2450) Voltage Adapter 120 VAC, 60 Hz, 35 VA 200 Watts**

ANALYZER COAGULATION
CONSUMABLES AND ACCESSORIES (START-UP)

NSN	Notes	Nomenclature	PN	QTY	UI	Unit Price	Total Price	MFG	Shelf Life, months	Refrig Y/N	CONUS Ship Time, weeks
6550015195574	Included W/NSN	Kit Verification Electronic quality control	HE-J04	1	EA	$499.80	$499.80	International Technidyne Corporation	N/A	N/A	3
6515015195575	Included W/NSN	Battery for Hemochron EQC – 3 volt (CR2450)	HE-JO3	1	EA	$6.95	$6.95	International Technidyne Corporation	N/A	N/A	3
	Included W/NSN	AC/DC Power adapter	HJADP11O	1	EA	$10.50	$10.50	International Technidyne Corpora	N/A	N/A	3

ITEMS FOUND IN THE UNIT ASSEMBLAGE SUPPORTING THE HEMOCHRON SIGNATURE JR.

NSN	Notes	Nomenclature	PN	QTY	UI	Unit Price	Total Price	MFG	Shelf Life, months	Refrig Y/N	CONUS Ship Time, weeks
6550015332811	In the UA Push Package	LEVEL 1 control for PT coagulation	DCJPT-N	1	EA	$70.00	$70.00	International Technidyne Corporation	N/A	N/A	3
6550015193928	In the UA Push Package	Control Coagulation Normal Level	DCJAPPT-N	1	PG	$53.55	$53.55	International Technidyne Corporation	N/A	N/A	3
6550015195566	In the UA Push Package	Level 2 Abnormal control for use with PT cuvettes	DCJPT-A	1	PG	$53.55	$53.55	International Technidyne Corporation	N/A	N/A	3
6550015195569	In the UA Push Package	Level 2 Abnormal control for use with APTT cuvettes	DCJAPTT-A	1	PG	$53.55	$53.55	International Technidyne Corporation	N/A	N/A	3
6640015193883	In the UA Push Package	Cuvette Bld Sample Protime Test	J201(PT)	1	EA	$152.00	$152.00	International Technidyne Corporatio	N/A	N/A	3
6550015193894	In the UA Push Package	Cuvette Bld Sample activated partial use w/whole Blood	J03 (APPT)	1	PG	$165.00	$160.65	International Technidyne Corporatio	N/A	N/A	3

ANALYZER COAGULATION
CONSUMABLES AND ACCESSORIES (RESUPPLY)

NSN	Nomenclature	PN	QTY	UI	Unit Price	Total Price	MFG	Shelf Life, months	Refrig Y/N	CONUS Ship Time, weeks
6550015195574	Kit Verification Electronic quality control	HE-J04	1	EA	$499.80	$499.80	International Technidyne Corporation	N/A	N/A	3
6550015332811	LEVEL 1 control for PT coagulation	DCJPT-N	1	EA	$70.00	$70.00	International Technidyne Corporation	N/A	N/A	3
6550015193928	Control Coagulation Normal Level	DCJAPPT-N	1	PG	$53.55	$53.55	International Technidyne Corporation	N/A	N/A	3
6550 015195566	Level 2 Abnormal control for use with PT cuvettes	DCJPT-A	1	PG	$53.55	$53.55	International Technidyne Corporation	N/A	N/A	3
6550 015195569	Level 2 Abnormal control for use with APTT cuvettes	DCJAPTT-A	1	PG	$53.55	$53.55	International Technidyne Corporation	N/A	N/A	3
6640015193883	Cuvette Bld Sample Protime Test	J201(PT)	1	EA	$152.00	$152.00	International Technidyne Corporatio	N/A	N/A	3
6550015193894	Cuvette Bld Sample activated partial use w/whole Blood	J03 (APPT)	1	PG	$165.00	$160.65	International Technidyne Corporatio	N/A	N/A	3
6515015195575	Battery for Hemochron EQC – 3 volt (CR2450)	HJ6011X or HE-JO3	1	EA	$6.95	$6.95	International Technidyne Corporation	N/A	N/A	3
OPTIONAL	Reusable Shipping Container Hardigg		1	EA	$236.25	$236.25	International Technidyne Corporation	N/A	N/A	3
	AC/DC Power adapter	HJADP11O	1	EA	$10.50	$10.50	International Technidyne Corpora	N/A	N/A	3

ANALYZER, HEMATOLOGY ACT 10 **TOC**

BECKMAN COULTER INC.
MODEL # 6605508
Manufacturer's Phone: (714) 961-4614 FAX: (714) 961-4158
Website: http://store.medicalresourceusa.com/beckman-6605508.html

AAC "W" ITEM NSN 6630-01-476-4792
AAC "J" ITEM NSN 6630-01-468-9142

UA's: 9300, 9301, 9302, 9303, 9304, 9304, F303, N303, N503, N703

USAMMA POC: Materiel Acquisition Directorate, 301-619-7403, DSN 343-7403
UNIT PRICE: $20,153.00

System Description: Automated, hematology analyzer offering measurements of 10 blood parameters. The AcT 10 provides results in less than 60 seconds with a minimum throughput of 50 samples per hour. Touch screen operation and simple language independent icons are used as the operator interface. A minimal sample volume of 12 µL of blood in whole blood mode or 20 µL of whole blood in pre-dilute mode is required for analysis. The pre-dilute mode offers a pre-dispense feature to provide precise quantities of diluent for dilutions.

Features:

- Offers 8 or 10 parameters: WBC, RBC, Hgb, Hct, MCV, MCH, MCHC, Plt, Lymph # and Lymph %
- One step sample processing with touch screen user interface
- Automated probe wipe safely cleans the probe
- Small 12 µL sample size permits whole blood analysis from both venous and capillary collections
- Compact design lets you put the AcT Series anywhere
- Minimum 50 samples per hour with STAT capability
- Zero routine maintenance requirements and high system reliability help contain costs.

Tests performed:

1) WBC – white blood count
2) RBC – red blood count
3) Hgb – hemoglobin
4) Hct – hematocrit
5) MCV – mean corpuscular volume
6) MCH – mean corpuscular hemoglobin
7) MCHC – mean cell hemoglobin concentration
8) Plt – platelet
9) Ly% - % of lymphocytes
10) Ly# - absolute lymphocyte count

Upgrade Advantages:

1) Throughput reduction AcT 10 – 1 min.)
2) Data Management System
3) 13 month unrefrigerated reagent shelf life
4) Small sample size AcT 10-20 µL).
5) Smart Card calibration

ANALYZER, HEMATOLOGY
AcT 10

ANALYZER, HEMATOLOGY AcT 10
PHYSICAL AND ENVIRONMENTAL SPECIFICATIONS

Analyzer Dimensions	**Height, in.**	**16.5**
	Width, in.	**15**
	Depth, in.	**15.4**
Weight, lb.		**30 lbs**
Cubic Ft		**2.205 cubic ft**
Analyzer Operating Temperature		**Room temperature between 16°C and 35°C (61°F and 95°F)**
Analyzer Storage Temperature		**61°F and 95°F**
Operating Humidity		**Humidity no higher than 85 percent without condensation.**
Power Requirements		**115/230 VAC, 50/60 Hz**
Amps		**1.5 amps**
Watts		**80 Watts, continuous at 50°C**

AcT 10 ACCESSORIES AND CONSUMABLES (START-UP) PACKAGE

NSN	NOTES	Nomenclature	PN	QTY	UI	Unit Price	Total Price	MFG	Shelf Life, months	Refrig Y/N	CONUS Ship Time, weeks
	INCL, W/NSN See Note Below	Kit, AcT 10, English Manual	6915088	EA	1	$ 1,205.32	$1,205.32	Beckman Coulter	N/A	N/A	3
	INCL, W/NSN See Note Below	Kit, AcT Tainer Pickup/Accessory	6915182	EA	1	$250.00	$ 250.00	Beckman Coulter	N/A	N/A	3
	INCL, W/NSN	Service Manual,	4237339	EA	1	$540.00	$540.00	Beckman Coulter	N/A	N/A	3
	INCL, W/NSN	Power Conditioner, Line	5609055	EA	1	$844.00	$844.00	Beckman Coulter	N/A	N/A	3
	Special Order Optional	Case, Hardened (Hardigg)	DSI0702 100	EA	1	$506.47	$506.47	Deployable Systems Inc	N/A	N/A	3

*** Kit, Act 10 English Manual contains these items they are not for sale as individual items**

4237206	BG, PPR/PLTC; CARR-PAK TOTE	1 EA
4237414	MANUAL; AC*T PAK INSTALLATION	1 EA
	TRAINING GUIDE (REV A)	1 EA
4216011	SERVICE FORM, WARRANTY CARD, ONE YEAR	1 EA
4235526	MANUAL; BASIC CONCEPTS OF QC (REV C)	1 EA
7590603	INTL PTS/ASSY; INTL PTS/ASSY, IQAP	1 EA
	ENROLLMENT FORM CYTOMETRY	1 EA
4237425	MANUAL; AC*T CUSTOMER LETTER	1 EA
4207215	MANUAL; HEMATOLOGY REORDER CARD	1 EA
624811	LBL, MASTER; LABEL SYMBOLS IVDD CHART	1 EA
624418	PRGMD CD-ROM; AC*T 8/10 OP	1 EA
	MANUALS CD-ROM (REV B)	1 EA
4237289	MANUAL; AC*T GETTING STARTED (REV C)	1 EA
4237314	MANUAL; AC*T SPECIAL PROCEDURES AND	1 EA
	TROUBLESHOOTING GUIDE (REV C)	1 EA
4237287	MANUAL; AC*T OPERATORS GUIDE (REV B)	1 EA
4237288	MANUAL; AC*T REFERENCE (REV C)	1 EA
4237498	MANUAL; AC*T SERIES, AC*T DIFF, AND	1 EA
	AC*T DIFF 2 ADDENDUM (REV F)	1 EA

*** Kit, AcT Tainer Pickup/Accessory contains these items they are not for sale as individual items**

1022827	CLIP, TRAV WIPE	1 EA
2527677	PLUNGER; ASSEMBLY 1.0 ML, STD TEFON SEAL	1 EA
3202036	TUBING, POLYURETH, .082 ID X .144 OD,	3 FT
3202205	TUBING, POLYURETH, .082 ID X .144 OD,	2 FT
3202207	TUBING, POLYURETH, .082 ID X .144 OD,	2 FT
3202208	TUBING, POLYURETH, .082 ID X .144 OD,	3 FT
3202209	TUBING, POLYURETH, .082 ID X .144	2 FT
3203015	TUBING, SILICONE; .062 IS X .031 W,	1 FT
3213214	TBG, SILICONE; MOLDED TUBE FOR	3 EA
	PERISTALTIC PUMP	1 EA
5102029	FUSE, 1.5 A, 250V, .25 X 1.25 GLASS,	2 EA
5402099	TOOLING, HAND OPER, *TOOL-4WAY	1 EA
6214108	VALVE, PNEUMATIC, CHECK, FOR .062 ID	3 EA
6232259	FITTING, HOSE BARB; Y, .093 ID TO .093 ID	3 EA
6232502	FTG, LUER; EXT TO .094 HOSE BARB	2 EA
6232801	FTG, LUER; FEMALE TO .094 HOSE BARB	1 EA
6233052	FILTER; WATER HYDROPHILIC, 10 MICRON,	6 EA
6805032	S/A; CHAMBER VACUUM ISOLATOR	1 EA
6859716	S/A; WIPE, TRAVERSE PROBE	1 EA
6232803	FILTER; AIR HYDROPHOBIC, 0.45 MICRON, MALE	2 EA
3202039	TUBING, POLYURETH, . 145 ID X .251 OD	12 FT
6232846	FTG, LUER; INTEGRAL LOCK	2 EA
2523477	MISC MECH CMPNT; CAP, .375L X .078ID	1 EA
6027225	LINE CORD, 3-18GA SJ	1 EA
6706778	S/A; WASTE SENSOR	1 EA
6805769	S/A; PICKUP TUBE, ON-BOARD, LYSE	1 EA
6805770	S/A; PICKUP TUBE, ON-BOARD, CLENZ	1 EA
6805771	S/A; PICK-UP TUBE, ON-BOARD, ISOTON	1 EA
6028504	CBL ASSY, (PURCH); PARALLEL PRINTER WITH	1 EA
	FERRITE BRAID SHIELD	1 EA
6233049	FILTER, WATER HYDROPHIC, 45 MICRON	1 EA
4277403	CUST FORM;FILTER REPLACEMENT	1 EA

ITEMS FOUND IN THE UNIT ASSEMBLAGE SUPPORTING THE ACT 10

NSN	NOTES	Nomenclature	PN	QTY	UI	Unit Price	Total Price	MFG	Shelf Life, months	Refrig Y/N	CONUS Ship Time, weeks
6630015255553	In The UA Push Package	PICK UP TUBING ISOTONE REAGENT	6805685	EA	1	$190.00	$190.00	Beckman Coulter	N/A	N/A	3
6630015255546	In The UA Push Package	PICK UP TUBING REAGENT	6805686	EA	1	$188.00	$188.00	Beckman Coulter	N/A	N/A	3
6630015255554	In The UA Push Package	PICK UP TUBING REAGENT	6805687	EA	1	$185.00	$185.00	Beckman Coulter	N/A	N/A	3
6550015078018	In The UA Push Package	SOLUTION CELL CONTROL EXTENDED LIFE 4-C CELL	7547187	PG	1	$300.00	$300.00	Beckman Coulter	3	Y	3
6550015098251	In The UA Push Package	REAGENT PAK	8547110	EA	1	$380.00	$380.00	Beckman Coulter	18	Y	3
6550015205867	In The UA Push Package	Calibrator, RED OPAQUE S-Cal, 1 x 4.2 mL	179310	EA	1	$93.00	$93.00	Beckman Coulter	1	Y	3
6550015071783	In The UA Push Package	RINSE ACT-DIFF CLEANSER RINSE SOLUTION	8547113	EA	1	$45.34	$45.34	Beckman Coulter	N/A	N/A	3
6550015071682	In The UA Push Package	LINEARITY CONTROL	7547065	EA	1	$230.00	$230.00	Beckman Coulter	N/A	N/A	3

AcT 10 CONSUMABLES (RESUPPLY) PACKAGE

NSN	Nomenclature	PN	QTY	UI	Unit Price	Total Price	MFG	Shelf Life, months	Refrig Y/N	CONUS Ship Time, weeks
6630015255553	PICK UP TUBING ISOTONE REAGENT	6805685	EA	1	$190.00	$190.00	Beckman Coulter	N/A	N/A	3
6630015255546	PICK UP TUBING REAGENT	6805686	EA	1	$188.00	$188.00	Beckman Coulter	N/A	N/A	3
6630015255554	PICK UP TUBING REAGENT	6805687	EA	1	$185.00	$185.00	Beckman Coulter	N/A	N/A	3
6550015078018	SOLUTION CELL CONTROL EXTENDED LIFE 4-C CELL	7547187	PG	1	$300.00	$300.00	Beckman Coulter	3	Y	3
6550015098251	REAGENT PAK	8547110	EA	1	$380.00	$380.00	Beckman Coulter	18	Y	3
6550015205867	Calibrator, RED OPAQUE S-Cal, 1 x 4.2 mL	179310	EA	1	$93.00	$93.00	Beckman Coulter	1	Y	3
6550015071783	RINSE ACT-DIFF CLEANSER RINSE SOLUTION	8547113	EA	1	$45.34	$45.34	Beckman Coulter	N/A	N/A	3
6550015071682	LINEARITY CONTROL	7547065	EA	1	$230.00	$230.00	Beckman Coulter	N/A	N/A	3

ANALYZER URINE CHEMISISTRY, CLINITEK 500 **TOC**

BAYER HEALTHCARE LLC
MODEL # CLINITEK 500
Manufacturer's Phone: (914) 631-8000 FAX: (914) 524-2132
Website: http://www.labnews.de//en/products/pr_c500.php

AAC "J" ITEM NSN 6630-01-526-7373

UA's: N303, N503, N703

USAMMA POC: Materiel Acquisition Directorate, 301-619-7403, DSN 343-7403UNIT PRICE: $8,000.00

System Description: Immediate start-up streamlines operations. This system has a automatic calibration mode which improve accuracy. The throughput of the system is 1 sample per 7 seconds. The unit has a large display, two sieve functions, a hand held bar code reader identifies sample color and clarity values, minimizing errors. This system stores memory for patient results and control results. Provides precise urinalysis test at your pace.

Features:

- Immediate start-up streamlines operations
- Nonpacing system improves efficiency.
- Automatic calibration improves accuracy.
- Throughput of 7 seconds per sample boosts laboratory productivity.
- Large display with touch-sensitive action speeds user interface.
- Two sieve functions - confirmatory and microscopic - flag abnormal results for quick review.
- A handheld bar-code reader identifies sample, color and clarity values, minimizing errors.
- Memory stores 500 patient results for convenient data retrieval
- Memory stores 200 control results for regulatory documentation
- Easily replaceable Program Card updates software.
- Flexible reporting options include visual display, printout or uploading to laboratory information system.
- Uses MULTISTIX® 10 SG Reagent Strips chemistries pads for: Leukocytes, Glucose, Bilirubin, Ketone, Specific Gravity, Nitrite, pH, Protein, Urobilinogen & Blood.
- Automatic sample ID, urine color & clarity determination via handheld barcode reader.

BAYER HEALTHCARE CLINITEK 500

ANALYZER URINE CHEMISISTRY, CLINITEK 500 PHYSICAL AND ENVIRONMENTAL SPECIFICATIONS

Dimensions	**Height**	**11.1”**
	Width	**14.8”**
	Length	**12.8”**
	Cube	**18 cu ft**
Weight	**Free Standing**	**16.30 lbs**
Operating Temperature Range		**64˚F to 86˚F**
Storage Temperature Range		**64˚F to 86˚F**
Relative Humidity (in use)		**20%to 85%**
Relative Humidity (storage)		**20%to 85%**
Power Requirements		**100/240 10%, 50/60 HZ AC**
Amps		**72 volt amps .5 miliamps leakeage**
Watts		**80 Watts**

CLINITEK 500 CONSUMABLES (START-UP)

NSN	Notes	Nomenclature	PN	QTY	UI	Unit Price	Total Price	MFG	Shelf Life, months	Refrig Y/N	CONUS Ship Time, weeks
6550010934010	Included W/NSN	Chex-sticks +25,-25	1364	1	BT	$59.00	$59.00	Bayer Health	18	N	3
6550011225540	Included W/NSN	Test Strips & Color Chart Bilirubin Bld Clucose	2161	1	BT	$131.57	$131.57	Bayer Health	24	N	3
	Included W/NSN	Paper Roll	5773	1	5 /BX	$17.50	$17.50	Bayer Health		N	3
	Included W/NSN	Reader Bar Code Handheld	6469	1	EA	$698.00	$698.00	Bayer Health		N	3
	Included W/NSN	Cord Power AC	40330028	1	EA	$5.70	$5.70	Bayer Health		N	3
	Included W/NSN	Manual Operator	95002937	1	EA	$121.90	$121.90	Bayer Health		N	3
	Not Included	Manual Service	9964708	1	EA	$75.00	$75.00	Bayer Health		N	3
	Included W/NSN	Fixed Platform/Holdown/Waste Bin	95002457	1	EA	$192.00	$192.00	Bayer Health		N	3
	Included W/NSN	Holddown	50210070		EA	$14.70	$14.70	Bayer Health		N	3
	Included W/NSN	Moving Table	50577530	2	EA	$14.45	$28.90	Bayer Health		N	3
	Included W/NSN	Card SW	130457C	1	EA	$596.15	$596.15	Bayer Health		N	3
	Included W/NSN	Pushbar	42204505	2	EA	$4.65	$9.30	Bayer Health		N	3

ITEMS FOUND IN THE UNIT ASSEMBLAGE SUPPORTING THE CLINITEK 500

NSN	Notes	Nomenclature	PN	QTY	UI	Unit Price	Total Price	MFG	Shelf Life, months	Refrig Y/N	CONUS Ship Time, weeks
6550010934010	In The UA Push Package	Chex-sticks +25,-25	1364	1	BT	$59.00	$59.00	Bayer Health	18	N	3
6550011225540	In The UA Push Package	Test Strips & Color Chart Bilirubin Bld Clucose	2161	1	BT	$131.57	$131.57	Bayer Health	24	N	3

CLINITEK 500 CONSUMABLES (RESUPPLY)

NSN	Nomenclature	PN	QTY	UI	Unit Price	Total Price	MFG	Shelf Life, months	Refrig Y/N	CONUS Ship Time, weeks
6550010934010	Chex-sticks +25,-25	1364	1	BT	$59.00	$59.00	Bayer Health	18	N	3
6550011225540	Test Strips & Color Chart Bilirubin Bld Clucose	2161	1	BT	$131.57	$131.57	Bayer Health	24	N	3
	Paper Roll	5773	1	5 /BX	$17.50	$17.50	Bayer Health		N	3
	Reader Bar Code Handheld	6469	1	EA	$698.00	$698.00	Bayer Health		N	3
	Cord Power AC	40330028	1	EA	$5.70	$5.70	Bayer Health		N	3
	Holddown	50210070		EA	$14.70	$14.70	Bayer Health		N	3
	Pushbar	42204505	2	EA	$4.65	$9.30	Bayer Health		N	3

CHEMISTRY ANALYZER FIELD, W/CASE, PICCOLO **TOC**

ABAXIS INC
MODEL # 100-1511
Manufacturer's Phone: (510) 675-6507 FAX: (510) 441-6150
Website: http://www.abaxis.com

AAC "J" ITEM NSN 6630-01-497-7291

UA's: 4905, 9305, F303, N303N, N503, N703

USAMMA POC: Materiel Acquisition Directorate, 301-619-7403, DSN 343-7403
UNIT PRICE: $19,440.37

System Description: Clinical chemistry analyzer designed for near-patient testing. Performs blood tests on whole blood samples with results achieved within minutes. Automatically performs more than 100 quality control checks per sample including a daily dual-level QC check and self-calibration with each run. The entirely automated procedure, from separating the blood to analyzing the sample and printing results, takes less than 15 minutes. A single-use plastic disc contains all the reagents and diluents necessary to perform a panel of up to 12 individual tests on just one sample (100 microliters) of whole blood, serum, or plasma.

Predeployment Training: Training will be conducted via manufacturer provided CD ROM. No additional cost for training.

Tests performed:

1) AMY - Amylase
2) TBIL - Total Bilirubin
3) BUN - Blood Urea Nitrogen
4) CRE - Creatinine
5) GLU - Glucose
6) TP - Total Protein
7) AST (SGOT) - Aspartate Aminotransferase
8) ALT (SGPT) - Alanine Aminotransferase
9) ALP - Alkaline Phosphatase
10) CA - Calcium
11) ALB - Albumin
12) GGT - Gamma Glutamyl Transferase
13) UA – Uric Acid

Upgrade Advantages

1) Point-of-use capability.
2) Self calibration.
3) Quicker initial calibration.
4) Significant maintenance reduction (only requires filter change).
5) Piccolo – 17 lbs).
6) Optional battery backup (12 VDC).
7) Disk of panels vs. individual slides.

PICCOLO

PICCOLO PHYSICAL AND ENVIRONMENTAL SPECIFICATIONS

Dimensions	**Height**	**9.5 inches**
	Width	**6 inches**
	Depth	**11.5 inches**
	Cube	**.97 cu ft**
Weight Analyzer	**Free Standing**	**15 lbs**
Operating Temperature Range		**59º F to 90º F**
Storage Temperature Range		**50ºF to 140 ºF**
Relative Humidity (in use)		**0 to 95%, noncondensing**
Relative Humidity (storage)		**0 to 95%, noncondensing**
Power Requirements		**100/250 volts AC; 50-60 Hz; 0.4 amps at 100 volts, 0.165 amps at 250 volts or 12/15 volts DC. 0.6 amps average at 5 watts**
Watts		**100 volts, 40 watts, 250 volts, 41.25 watts, 12/15 volts DC/5 watts**

CHEMISTRY ANALYZER FIELD DEPLOYMENT PACKAGE ACCESSORIES AND CONSUMABLES (START-UP) PACKAGE

NSN	Notes	Nomenclature	PN	QTY	UI	Unit Price	Total Price	MFG	Shelf Life, months	Refrig Y/N	CONUS Ship Time, weeks
6630014976730	Included with NSN	Case Carrying Analyzer	100-1512	1	EA	$425.00	$425.00	Abaxix Inc.	Infef.	N	3
NO NSN	Included with NSN	Training DVD	100-5016	1	EA	Free	Free	Abaxis Inc	Indef.	N	3
NO NSN	Included with NSN	TRB3 Troubleshooting Sftwr. CD	100-5085	1	EA	Free	Free	Abaxis Inc	Indef.	N	3
	Included with NSN	Piccolo Manual	100-7103	1	EA	$63.00	$63.00	Abaxis Inc	Indef.	N	3
NO NSN	Included with the manual	Piccolo Easy-Start Guide	400-7138	1	EA	Free	Free	Abaxis Inc	Indef.	N	3
6630014977281	Included with NSN	Uninterruptible Power Supply	988-0009	1	EA	$148.50	$148.50	Abaxis Inc	Indef.	N	3
	All items listed below are in the Field Accessory kit	Field Deployment Accessory Kit	100-1507	1	EA	$48.55	$48.55	Abaxis Inc	Indef.	N	3
6630015433469	Included with NSN	Storage Bin	100-1509	1	EA	$5.50	$5.50	Abaxis, Inc	Indef.	N	3
	Included with NSN	Ziploc bags	100-9002	1	EA	$2.50	$2.50	Abaxis, Inc.	Indef.	N	3
6630014916707	Included with NSN	Result Cards	400-7000	2	PG/ 12	$5.40	$5.40	Abaxis Inc	Indef.	N	3
	Included with NSN	Lithium Heparin Microtainer tubes	500-9003	10	EA	$37.25	$37.25	Abaxix, Inc	Indef	N	3
6640014980685	Included with NSN	Pipet Micro Plastic	500-9006	1	EA	$13.45	$13.45	Abaxis Inc	Indef.	N	3
6640014980698	Included with NSN	Tip Pipet Plastic	500-9007	1	PG/ 96	$4.45	$4.45	Abaxis Inc	Indef.	N	3
6515014994162	Included with NSN	Screwdriver	500-9008	1	EA	$1.75	$1.75	Abaxis Inc	Indef.	N	3
6630014976652	Included with NSN	Operator's Manual	100-7075	1	EA	$70.00	$70.00	Abaxis Inc.	N/A	N	2
6630014976654	Included with NSN	Power Cord	981-0090	1	EA	$8.75	$8.75	Abaxis Inc.	N/A	N	2
6130014570955	Included with NSN	Power Supply	988-0008	1	EA	$87.50	$87.50	Abaxis Inc.	N/A	N	2

ITEMS FOUND IN THE UNIT ASSEMBLAGE SUPPORTING THE CHEMISTRY ANALYZER FIELD DEPLOYMENT PACKAGE

NSN	NOTES	Nomenclature	PN	QTY	UI	Unit Price	Total Price	MFG	Shelf Life, months	Refrig Y/N	CONUS Time, we
6550015210911	IN THE UA PUSH PACKAGE	CONTROL SET BLD CHEM	100-9004-4	1	EA	$40.00	$40.00	Abaxix Inc	Infef	Y	3
6550015281992	IN THE UA PUSH PACKAGE	TEST DISC GEN CHEM10S	400-0029	2	PG	$140.00	$280.00	Abaxix Inc	9 mo.	Y	3

CHEMISTRY ANALYZER FIELD DEPLOYMENT PACKAGE CONSUMABLES (RESUPPLY) PACKAGE

NSN	Nomenclature	PN	QTY	UI	Unit Price	Total Price	MFG	Shelf Life, months	Refrig Y/N	CONUS Ship Time, weeks
6630014916707	RESULT CARDS	400-7000	4	PG/12	$6.00	$24.00	Abaxis Inc.	I Indef.	N	3
6640014980698	TIP PIPETTE PLASTIC DISPOSABLE	500-9007	1	PG/96	$4.95	$4.95	Abaxis Inc.	Indef.	N	3
6640014980685	Pipet Micro Plastic	500-9006	1	EA	$13.45	$13.45	Abaxis Inc	Indef.	N	3
6550015210911	CONTROL SET BLD CHEM	100-9004-4	1	EA	$40.00	$40.00	Abaxix Inc	Indef.	Y	3
6550015281992	TEST DISC GEN CHEM10S	400-0029	2	PG	$140.00	$280.00	Abaxix Inc	9 mo	Y	3
	Ziploc bags	100-9002	1	EA	$2.50	$2.50	Abaxis, Inc.	Indef.	N	3

CHEMISTRY ANALYZER FIELD DEPLOYMENT PACKAGE ACCESSORIES (RESUPPLY) PACKAGE

NSN	Nomenclature	PN	QTY	UI	Unit Price	Total Price	MFG	Shelf Life, months	Refrig Y/N	CONUS Ship Time, weeks
6630-01-497-6652	Operator's Manual	100-7075	1	EA	$70.00	$70.00	Abaxis Inc.	N/A	N	2
6630-01-497-6654	Power Cord	981-0090	1	EA	$8.75	$8.75	Abaxis Inc.	N/A	N	2
6130-01-457-0955	Power Supply	988-0008	1	EA	$87.50	$87.50	Abaxis Inc.	N/A	N	2

CENTRIFUGE LAB TOC

THERMO ELECTRON CORPORATION
MODEL: # 8464
Manufacturer's Phone: (508) 482-7000 FAX (508) 634 2112
Website: **http://www.thermo.com/com/cda/product/detail/1,1055,23442,00.html**

ACC "W "NSN ITEM 6640-01-205-2423
ACC "J "NSN ITEM 6640-01-499-0533

UA's: N303, N403, N436, N503, N703

USAMMA POC: Materiel Acquisition Directorate, 301-619-7403, DSN 343-7403

UNIT PRICE: $7,297.63

System Description: High performance/high speed mid-sized A multipurpose bench style (4 X 250ML, can hold several different styles of tubes, bottles or vessels ventilated centrifuge with a premium accessory set designed t support a range of demanding applications protein research, molecular biology and general research.

The IEC Multi series has advantages that lead to consistent separation results, including G-force run control, exclusive AT-Speed Timer and Re-Run control, and automatically controlled Fast Cooling/Warming to the temperatures required for your protocol. Thus eliminating run to run variations. Exercising control over variables maximizes yields, reduces the chance for operator error and establishes critical baseline for sample preparation.

Features:

- High speed: 50 ml Falcon/Corning conical tube capacity. Unique fixed angle rotor takes 50ml to 25,000+ g.
- **Optional:** High microplate capacity: DoubleDeep rotor accepts up to 10 standard microplates or 4 deepwell microplates in one run.
- Powerful programming interface: Keypad entry allows close control of centrifuge parameters with 98 stored programs and 7 minute auto cool / auto warm feature.
- Outstanding rotor capability: Including.Swinging bucket for Sealed Aerocarrier, adapters. Exclusive autoclavable Aerocarrier® adapters contain aerosols consistent with OSHA's bloodborne pathogen rule. Adapters can be removed from rotor for transport, and easily sealed with screw-on, transparent lids.

CENTRIFUGE LAB PHYSICAL AND ENVIRONMENTAL SPECIFICATIONS

Dimensions	**Height**	**15.75”**
	Width	**20.50”**
	Depth	**25.75”**
	Cube	**4.81**
Weight	**Free Standing**	**175 lbs**
	Shipping	**232 lbs**
Operating Temperature Range		**10 C to 35C**
Storage Temperature Range		**20C to 70C**
Relative Humidity (in use)		**20% to 90%**
Relative Humidity (storage)		**5% to 95%**
Power Requirements		**120 Volts 60 Hz**
amps		**8 amps**
Watts		**960**

CENTRIFUGE LAB ACCESSARIES AND CONSUMABLES (START-UP)

NSN	NOTES	Nomenclature	PN	QTY	UI	Unit Price	Total Price	MFG	Shelf Life, months	Refrig Y/N	CONUS Ship Time, weeks
6640014997632	Included W/NSN	Rotor Centrifuge Swingin Bucket	8947	1	EA	$2,12.50	$2,212.50	THERMO ELECTRON CORP	indef	N	3
6640014991637	Included W/NSN	Adapter Centrifuge Areocarrier 5 slot	6561E	1	EA	$194.58	$194.58	THERMO ELECTRON CORP	Indef	N	3
6640014991640	Included W/NSN	Adapter Centrifuge tube multi-series 2 slot	6560E	1	EA	$173.86	$173.86	THERMO ELECTRON CORP	Indef	N	3
6640015004272	Included W/NSN	Adapter Centrifuge tube 250ml hole diameter	6558E	1	EA	$346.02	$346.02	THERMO ELECTRON CORP	Indef	N	3

CENTRIFUGE LAB ACCESSARIES AND CONSUMABLES (RESUPPLY)

NSN	Nomenclature	PN	QTY	UI	Unit Price	Total Price	MFG	Shelf Life, months	Refrig Y/N	CONUS Ship Time, weeks
6640014991637	Adapter Centrifuge Areocarrier 5 slot	6561E	1	EA	$194.58	$194.58	THERMO ELECTRON CORP	Indef	N	3
6640014991640	Adapter Centrifuge tube multi-series 2 slot	6560E	1	EA	$173.86	$173.86	THERMO ELECTRON CORP	Indef	N	3
6640015004272	Adapter Centrifuge tube 250ml hole diameter	6558E	1	EA	$346.02	$346.02	THERMO ELECTRON CORP	Indef	N	3

CENTRIFUGE LABORATORY 3400 RPM TOC

BECTON DICKINSON AND CO
MODEL: # SERO-FUGE, 420352
Manufacturer's Phone: (410) 416-4000
Website: **http://catalog.bd.com**

ACC "W"NSN ITEM 6640-01-204-8691
ACC "J"NSN ITEM 6640-01-416-7345

UA's: 3504, F304, N303, N304, N503, N504, N703, N704

USAMMA POC: Materiel Acquisition Directorate, 301-619-7403, DSN 343-7403
UNIT PRICE: $2,227.00

System Description: This unit has a high/low switch, electronic timer, brake switch and has a lid switch. This centrifuge also comes with a 12place rotor which can accommodate from 10 X 75 mm to 12 X 75 mm tubes (not provided). The unit is portable and can be used for blood grouping, cross matching, coombs test and other cell washing procedures.

NOTE TO REQUISITIONER: FOR REPLACEMENT 12 PLACE ROTOR ORDER NSN 6640-00-445-1609 AND FOR REPLACEMENT 6 PLACE ROTOR ORDER NSN 6640-01-162-2949.

SERO-FUGE CENTRIFUGE
MODEL 420352

PHYSICAL AND ENVIRONMENTAL SPECIFICATIONS

Dimensions	**Height**	**17”**
	Width	**13”**
	Depth	**12”**
	Cube	**1.53 cu ft**
Weight		**28 lbs**
Maximum Speed		**3,550 RPM HIGH SPEED**
		2,450 RPM LOW SPEED
Operating Temperature Range		**41ºF to 104ºF**
Storage Temperature Range		**41ºF to 104ºF**
Relative Humidity (in use)		**20% to 90%**
Relative Humidity (storage)		**20% to 90%**
Power Requirements		**115 Volts, 50 60 Hz 6.5 amps**
Watts		**66 Watts**

CENTRIFUGE
COSUMABLES & ACCESSORIES (START-UP)

NSN	NOTES	Nomenclature	PN	QTY	UI	Unit Price	Total Price	MFG	Shelf Life, months	Refrig Y/N	CONUS Ship Time, weeks
6640004451609	Included W/NSN	12 PLACE ROTOR	42-0545	1	EA	$205.33	$205.33	BECTON DICKINSON	N/A	N/A	3
6640011622949	OPTIONAL ITEM	6 PLACE ROTOR	420526	1	EA	$589.98	$589.98	BECTON DICKINSON	N/A	N/A	3
	Included W/NSN	Operators Manual	421337	1	EA	$10.00	$10.00	BECTON DICKINSON	N/A	N/A	3

CHOLINESTERASE TEST SYSTEM **TOC**

EQM RESEARCH INC.
MODEL: # MODEL 400
Manufacturer's Phone: (513)-661-0560 Fax (513) 661-0567
Website: http://www.eqmresearch.com

ACC "L"NSN ITEM 6630-01-462-4878

UA's: N303, N503, N703

USAMMA POC: Materiel Acquisition Directorate, 301-619-7403, DSN 343-7403

UNIT PRICE: $2,417.00

System Description: Test-mate ChE Cholinesterase Test System (Model 400)
The Test-mate ChE System is for in vitro diagnostic use for the quantitative determination of both erythrocyte cholinesterase and plasma cholinesterase in whole blood to monitor pesticide exposure. This system is for laboratory use by trained laboratory technicians only. This system is for use only with the AChE Assay Kit and the PChE Assay Kit and is not intended for use with any other assay or reagent kit.
The Test-mate ChE System includes: hard-shell storage case, photometric analyzer with battery, reagent tool, assay tube rack, one AChE Assay Kit to perform 96 erythrocyte cholinesterase tests and a detailed instruction manual.Test-mate ChE System

CHOLINESTERASE TEST SYSTEM
MODEL 400

CHOLINESTERASE TEST SYSTEM
PHYSICAL AND ENVIRONMENTAL SPECIFICATIONS

Dimensions	**Height**	**11”**
	Width	**7”**
	Depth	**10”**
	Cube	**.25 cu ft**
Weight		**12 lbs**
Operating Temperature Range		**Room temperature**
Storage Temperature Range		**50ºF to 122ºF**
Relative Humidity (in use)		**5% to 95%**
Relative Humidity (storage)		**5% to 95%**
Power Requirements		**9 volt DC**

CHOLINESTERASE TEST SYSTEM
COSUMABLES & ACCESSORIES (START-UP)

NSN	Notes	Nomenclature	PN	QTY	UI	Unit Price	Total Price	MFG	Shelf Life, months	Refrig Y/N	CONUS Ship Time, weeks
6550015244560	Included W/NSN	AChE Erythrocyte Cholinesterase Assay Kit	460	1	EA	$280.00	$280.00	EQM RESEARCH INC.	12	N	4-6
See Resupply	See Resupply	Battery, 9 Volt DC		1	EA			EQM RESEARCH INC.	12	N	4-6
	Included W/NSN	Operating/Service Literature				Free	Free	EQM RESEARCH INC.	12	N	4-6

ITEMS FOUND IN THE UNIT ASSEMBLAGE SUPPORTING THE CHOLINESTERASE TEST SYSTEM

NSN	Notes	Nomenclature	PN	QTY	UI	Unit Price	Total Price	MFG	Shelf Life, months	Refrig Y/N	CONUS Ship Time, weeks
6550015244560	In The UA Push Package	AChE Erythrocyte Cholinesterase Assay Kit	460	1	EA	$280.00	$280.00	EQM RESEARCH INC.	12	N	4-6

CHOLINESTERASE TEST SYSTEM
COSUMABLES (RESUPPLY)

NSN	Notes	Nomenclature	PN	QTY	UI	Unit Price	Total Price	MFG	Shelf Life, months	Refrig Y/N	CONUS Ship Time, weeks
6550015244560	Included W/NSN	AChE Erythrocyte Cholinesterase Assay Kit	460	1	EA	$280.00	$280.00	EQM RESEARCH INC.	12	N	4-6
6135009002139	Included W/NSN	Battery, 9 Volt DC	MN 1604	1	12/ PG	$56.56	$56.56	EQM RESEARCH INC.	12	N	4-6

CLEANER VACUUM ELECTRIC **TOC**

MINUTEMAN INTERNATIONAL INC.
MODEL # L0-065
Manufacturer's PHONE (630) 627-6900 Fax (630) 627-1130
Website: http://www.minutemanintl.com

AAC "W" ITEM NSN 7910-01-177-0622
AAC "J" ITEM NSN 7910-01-327-0757

UA's: 4905, F301, F308, F383, F400, N301, N303, N305, N308, N309, N310, N311, N312, N314, N503, N523, N703, N725

USAMMA POC: Materiel Acquisition Directorate, 301-619-7403, DSN 343-7403
UNIT PRICE: $1,640.47

Features: For use in the Operating Room; portable; infectious waste; lightweight with all the necessary components. Storage and Transit Conditions range in temperature from -80 degrees F to 155 degrees F. and air pressure up to 2.47 PSI; electric comp treatment for fungus resistance; for use in removing water or fluid material from floors; will also pick up small solids or mud; brand specific end item.

CHARACTERISTICS

Dimensions	**Height**	**38”**
	Width	**24”**
	Length	**26”**
Weight		**86 lbs**
Cubic Ft		**13.72**
Operating Temperature		**-80 deg F to 155F**
Operating Humidity		**2.47 psi**
Storage Temperature		**-80 deg F to 155F**
Storage Humidity		**2.47 psi**
Power Requirements		**120/130V 50 HZ 900W AC**

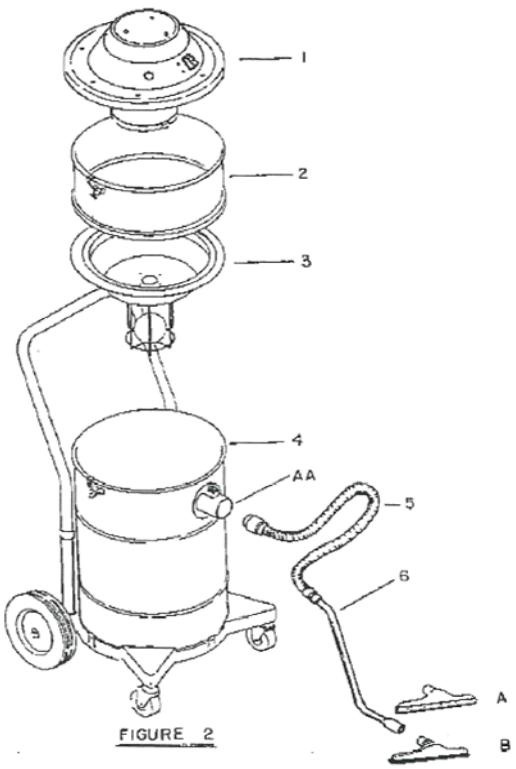

FIGURE 2

WET & DRY

1. Vacuum Lid Assembly Complete
2. Stainless Steel Adapter Complete
3. Liquid Shut-Off Assembly Complete
4. 15 Gallon Stainless Steel Tank
5. Hose Assembly 1 1/2" x 10'
6. Wand Assembly Complete - Chrome Plated

A. 14" Squeegee Tool
B. 14" Bare Floor Tool
C. 16" Carpet Tool

CLEANER VACUUM ELECTRIC TANK
ACCESSORIES AND CONSUMABLES

NSN	Notes	Nomenclature	PN	QTY	UI	Unit Price	Total Price	MFG	Shelf Life, months	Refrig Y/N	CONUS Ship Time, weeks
4470014961503	Included with NSN	Filter, Hepa Hygenic	110010	1	EA	$435.24	$435.24	MINUTEMAN INTL INC	N	N	2
7910015280008	Included with NSN	Adapter, Vacuum	750081-1	1	EA	$62.87	$62.87	MINUTEMAN INTL INC	N	N	2
7910015280264	Included with NSN	Brush, (Bare Floor Tool)	800603	1	EA	$29.62	$29.62	MINUTEMAN INTL INC	N	N	2
7910015280253	Included with NSN	Handle, Floor (Wand Assembly)	290000	1	EA	$24.78	$24.78	MINUTEMAN INTL INC	N	N	2
7910015280256	Included with NSN	Hose, Vacuum Cleaner (1 ½” X 10’)	800317	1	EA	$47.15	$47.15	MINUTEMAN INTL INC	N	N	2
7920015310978	Included with NSN	Squeegee (14”)	800605	1	EA	$25.99	$25.99	MINUTEMAN INTL INC	N	N	2
7910015280260	Included with NSN	TOOL, CARPET & RUG 16 INCH	807237	1	EA	$18.74	$18.74	MINUTEMAN INTL INC	N	N	2

METER TRIAGE TOC

DISTRIBUTOR FISHER SCIENTIFIC CO.
Manufacture BIOSITE INCORPORATED
MODEL # 1355040
Distributor's PHONE (412) 490-8908 FAX (412) 770-2224
Manufacture's PHONE
Website https://www1.fishersci.com/Coupon?gid=2726265&cid=1333
Website http://www.biosite.com/overview/contact.aspx

AAC "L" ITEM NSN 6640-01-493-9162

UA's: F303, N303, N503, N703

USAMMA POC: Materiel Acquisition Directorate, 301-619-7403, DSN 343-7403
UNIT PRICE: $ 4,750.00

System Desription: **The triage meter is used to read cardiac testing profiles using the biosite cardiac triage panel.**

Features:

- Easy to use
- No sample prep — whole blood or urine testing
- Rapid, accurate results using Triage System tests and panels
- Seamless laboratory connectivity
- Reports results in approximately 15 minutes
- Performs multiple assays and automatically identifies which assay is inserted
- Interactive RS232 port permits LIS interface and barcode scanner attachment
- Memory recall, user ID lockout, QC frequency, and lockout of failed QC and expired reagents

Memory Capacity:

- User IDs: 600
- Patient Test Results: 750
- Reagent Lot Code Chips: 20
- QC Sim Results: 70
- QC Results: 500
- QC Sample Code Chips: 30

METER TRIAGE

METER TRIAGE PHYSICAL AND ENVIRONMENTAL SPECIFICATIONS

Dimensions	**Height**	**6”**
	Width	**12”**
	length	**16”**
	Cube	**.666 cu ft**
Weight		**1.5 lbs without batteries**
Operating Temperature Range		**Room temperature**
Storage Temperature Range		**15 TO 30 DEGREES C**
Relative Humidity (in use)		**5 to 95 %**
Relative Humidity (storage)		**10 to 85 %**
Power Requirements		**6 Volt AC/DC converter, AA batteries**
Watts		**15**

METER TRIAGE CONSUMABLES (START-UP)

NSN	Notes	Nomenclature	PN #	QTY	UI	Unit Price	Total Price	MFG	Shelf Life, months	Refrig Y/N	CONUS Ship Time, weeks
See Resupply	INCLUDED W/NSN	AA BATTERIES		4	EA				Indef	N/A	3
	INCLUDED W/NSN	OPERATOR'S MANUAL	FREE	1	EA	FREE	FREE	FISHER SCIENTIFIC	9 months	Y	3

ITEMS FOUND IN THE UNIT ASSEMBLAGE SUPPORTING THE METER TRIAGE

NSN	Notes	Nomenclature	PN #	QTY	UI	Unit Price	Total Price	MFG	Shelf Life, months	Refrig Y/N	CONUS Ship Time, weeks
6550014932664	In The UA Push Package	Calibration Verification Cardiac Triage	1397002	1	EA	$88.41	$88.41	FISHER SCIENTIFIC	9 months	Y	3
6550014932606	In The UA Push Package	Cardiac Panel Triage	1397000	1	PG	$756.89	$756.89	FISHER SCIENTIFIC	9 months	Y	3
6550014932661	In The UA Push Package	CONTROL SET CARDIAC TRIAGE	1397001	1	EA	$87.89	$87.89	FISHER SCIENTIFIC	4 months	Y	3

METER TRIAGE CONSUMABLES (RESUPPLY)

NSN	Nomenclature	PN #	QTY	UI	Unit Price	Total Price	MFG	Shelf Life, months	Refrig Y/N	CONUS Ship Time, weeks
6135009857845	AA BATTERIES	C18.1	1	24/ PG	$41.60	$41.61	GSA	Indef	N/A	3
6550014932664	Calibration Verification Cardiac Triage	1397002	1	EA	$88.41	$88.41	FISHER SCIENTIFIC	9 months	Y	3
6550014932606	Cardiac Panel Triage	1397000	1	PG	$756.89	$756.89	FISHER SCIENTIFIC	9 months	Y	3
6550014932661	CONTROL SET CARDIAC TRIAGE	1397001	1	EA	$87.89	$87.89	FISHER SCIENTIFIC	4 months	Y	3
	OPERATOR'S MANUAL	FREE	1	EA	FREE	FREE	FISHER SCIENTIFIC	N/A	N/A	3

MICROSCOPE OPTICAL LAB GENERAL PURPOSE **TOC**

NIKON INC
MODEL # ECLIPSE 50i-TE-4PA TILT HEAD MIC
Manufacturer's Phone: (410) 371-8670 FAX: (410) 995-1335
Website: http://www.nikonusa.com/template.php?cat=5&grp=25&productNr=50i

AAC "W" ITEM NSN 6650-01-207-0829
AAC "J" ITEM NSN 6650-01-519-8473

UA's: 3263, 3504, 3905, 3912, 4905, 4912, 4914, N403

USAMMA POC: Materiel Acquisition Directorate, 301-619-7403, DSN 343-7403
UNIT PRICE: $7,009.80

System Description: This is a standard laboratory microscope for use in variety of clinical specialty setting. It includes objectives at the following magnification 4X, 10X, 40X, and 100X. It is also adaptable for high resolution bright field, dark field, EPI-Fluorescence and phase contrasts use. The light source (bulb), power cord, and optics interchangeable with E400 (NSN 6650-01-501-2807); The body tube contains access port in back adaptable for use with a camera using "C" mount adapter. It comes with case.

Microscope ECLIPSE 50i-TE-4PA

Case, Microscope 50i

MICROSCOPE OPTICAL LAB PHYSICAL AND ENVIRONMENTAL SPECIFICATIONS

Dimensions	**Height**	**22 inches**
	Width	**17 inches**
	Depth	**12.7 inches**
	Cube	**2.93 cu ft**
Weight		**40 lbs**
Operating Temperature Range		**50º F to 95º F**
Storage Temperature Range		**Not to exceed 105 ºF**
Relative Humidity (in use)		**Less than 85%, noncondensing**
Relative Humidity (storage)		**Less than 90%, noncondensing**
Power Requirements		**110/220 volts; 9 amps**
Watts		**148 watts**

MICROSCOPE OPTICAL LAB CONSUMABLES/ACCESSORIES (START-UP)

NSN	NOTES	Nomenclature	PN	QTY	UI	Unit Price	Total Price	MFG	Shelf Life, months	Refrig Y/N	CONUS Ship Time, weeks
6240015429964	Included W/NSN	Bulb, Halogen	84246	1	EA	$14.07	$14.07	Nikon Inc.	Indef.	N	3
6650015426063	Included W/NSN	Power cord, grounded three wire	79035	1	EA	$10.89	$10.89	Nikon Inc.	Indef.	N	3
	Included W/NSN	Case Hardened, shippable, for 50i/55i	92405	1	EA	$525.00	$525.00	Nikon Inc.	Indef.	N	3

ITEMS FOUND IN THE UNIT ASSEMBLAGE SUPPORTING THE MICROSCOPE

NSN	NOTES	Nomenclature	PN	QTY	UI	Unit Price	Total Price	MFG	Shelf Life, months	Refrig Y/N	CONUS Ship Time, weeks
6640000744191	In The UA Push Package	Glass Slide	3703-2F	12	PG72s	$36.16	$433.92	ELITE MED PROD	Indef.	N	3
6640006180066	In The UA Push Package	Glass Covers	M6020-2	2	PG	$81.06	$162.12	CARDINAL HEALTH	Indef.	N	3

MICROSCOPE OPTICAL LAB CONSUMABLES (RESUPPLY)

NSN	Nomenclature	PN	QTY	UI	Unit Price	Total Price	MFG	Shelf Life, months
6240015429964	Bulb, Halogen	84246	1	EA	$14.07	$14.07	Nikon	Indef.
6640000744191	Glass Slide	3703-2F	12	PG72s	$36.16	$433.92	ELITE MED PROD	Indef.
6640006180066	Glass Covers	M6020-2	2	PG	$81.06	$162.12	CARDINAL HEALTH	Indef.

REFRACTOMETER HAND TOC

REICHERT INC.
MODEL 1310400A
Manufacturer's PHONE (716) 686-4500 Fax (716)-686-4554
Website: http://www.reichertai.com/

AAC "L" ITEM NSN 6650-00-933-3218

UA's: 3263, 4905, 4912, F303, N303, N503, N730

USAMMA POC: Materiel Acquisition Directorate, 301-619-7403, DSN 343-7403
UNIT PRICE: $ 715.00

Features: This is a hand immersion type refractometer with a 3 scale direct reading this unit has a urine specific gravity range from1.000 to 1.035 w/0.001 graduated intervals and values marked at each 0.005 graduation, serum or plasma protein 2.500 to 15.000 GM/100 MLw/0.1 GM/100ML intervals and values marked at each 0.5 graduation, refractive index 0 to 320 w/ 2.0 intervals and marked at every tenth graduation, temperature compensated measuring prism incorporated, w/recalibration feature, focusing eyepiece, conversion chart, O/A DIA 6.375 in LG X 1.250 in., **A protective case is provide**

REFRACTOMETER PHYSICAL AND ENVIRONMENTAL SPECIFICATIONS

Dimensions	**Length**	**6.5 inches**
	Diameter	**1 inch diameter**
Weight		**.37 pounds including case**
Operating Temperature Range		**60 – 100 degrees F**
Storage Temperature Range		**Never expose to temperatures above 150 Deg F**

REFRIGERATOR BLOOD COOLING& STORAGE FIELD ENVIRONMENT
TOC

DOUBLEDAY ACUISITIONS LLC
ACUTEMP
MODEL # HMC-MIL-1
Manufacturer's PHONE: (937) 312-0114 FAX: (937) 312-1277
Website: http://www.estglobal.com/hemacool_military.html

AAC "W" ITEM NSN 4110-01-497-9564
AAC "J" ITEM NSN 4110-01-506-0895

UA's: 213A, 3263, 3267, 901A, 504A, N302, N504, N703, N503, N304, N303, N704, F303, F306

USAMMA POC: Materiel Acquisition Directorate, 301-619-7403, DSN 343-7403
UNIT PRICE: $5,560.00

Description: The HemaCool™ employs new technology to protect critical blood supplies under field conditions. It is ergonomically designed for operations in adverse environments, incorporating features and controls to precisely maintain the required temperature for blood storage.

Features:

- Precise temperature control under adverse conditions
- Easily transportable
- Can run on a variety of power sources including AC, DC, onboard batteries, and solar array
- Rugged design for demanding applications
- Available with Sled Rails, Wheels, or Skis

HEMACOOL REFRIGERATION SYSTEM

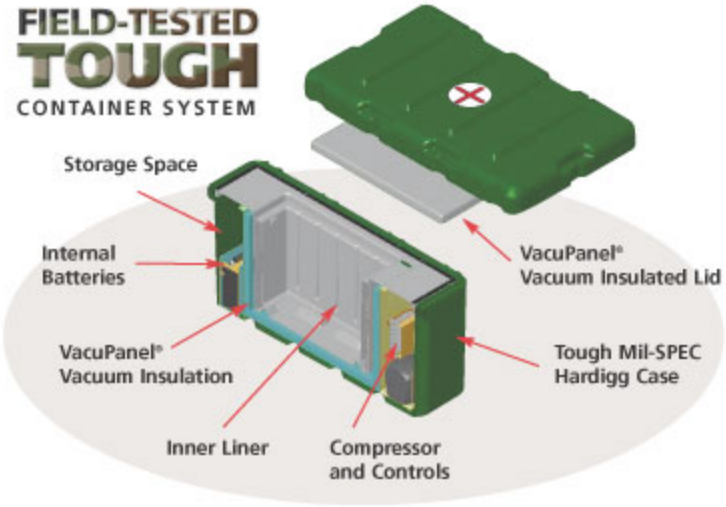

HEMACOOL REFRIGERATION SYSTEM
PHYSICAL AND ENVIRONMENTAL SPECIFICATIONS

Dimensions	**Height**	**21.8 inches**
	Width	**21 inches**
	Length	**37.5 inches**
Payload Dimensions	**Height**	**13 inches**
Payload Volume	**Width**	**14 inches**
	Length	**18 inches**
Payload Volume		**2 cu ft (56.6 liters)**
Empty Weight,		**145 lbs**
Cube		**9.5 cu ft**
Storage Only		**40 x 450 ml or 60 x 250 ml units**
Operating Temperature		**-4°F min., 120°F max. (-20°C to 49°C)**
Storage Temperature		**-22°F min., 149°F max. (-30°C to 65°C)**
Temperature Limits		**-4°F min., 120°F max. (-20°C to 49°C)**
Battery Set (2 Each)		**12/24 VDC Internal 40 amp-hour Battery Set**
Power Requirements		**100/240 Volts AC, 46/63 Hz**
amps		**.55 amps**
Watts		**55 watts**

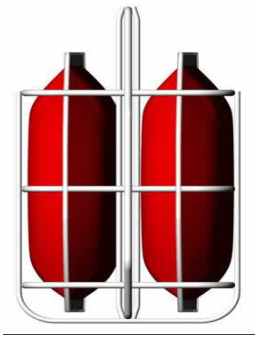

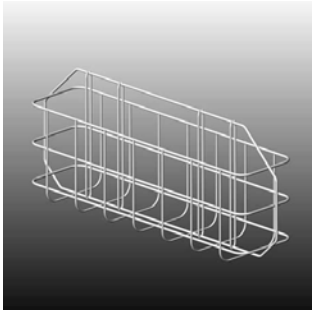

HEMACOOL, BLOOD BAG BASKET
PART # 100000

HEMACOOL
SHOWN WITH PLASMA
Part # HMC-MIL-1

HEMACOOL
CONTROL
PANEL

HEMACOOL
SHOWN WITH VACCINE
Part # HMC-MIL-1

HEMACOOL REFRIGERATION SYSTEM ACCESSORIES AND CONSUMABLES (START-UP)

NSN	NOTES	Nomenclature	PN	QTY	UI	Unit Price	Total Price	MFG	Shelf Life, months	Refrig Y/N	CONUS Ship Time, weeks
6515015130792	INCLUDED W/NSN	Blood Basket	100,000	5	EA	$16.44	$82.20	ACUTEMP	N/A	N	2
4110015188542	INCLUDED W/NSN	AC Power Cord	VXC-1-06	1	EA	$16.00	$16.00	ACUTEMP	N/A	N	2
6150015121007	INCLUDED W/NSN	DC Power Cord	100003	1	EA	$87.00	$87.00	ACUTEMP	N/A	N	2
4110015188252	INCLUDED W/NSN	Battery	101880	2	SE	$60.00	$120.00	ACUTEMP	N/A	N	2

HEMACOOL REFRIGERATION SYSTEM CONSUMABLE (RESUPPLY)

NSN	Nomenclature	PN	QTY	UI	Unit Price	Total Price	MFG	Shelf Life, months	Refrig Y/N	CONUS Ship Time, weeks
4110015188252	Battery	101880	2	SE	$60.00	$120.00	ACUTEMP	N/A	N	2

REFRIGERATOR-FREEZER MECHANICAL FIELD WARD **TOC**

MARVEL INDUSTRIES DIV OF NORTHLAND CORP
MODEL # 6CRF
Manufacturer's PHONE: (765) 962-2521 FAX (765) 962-2493
WEB SITE: www.marvelindustries.com

AAC "W" ITEM NSN 4110-01-180-3420
AAC "J" ITEM NSN 4110-01-425-8009

UA's: 4723, 4905, 4912, 4914, F302, F306, F310, N303, N306, N309, N310, N313, N321, N503, N506, N513, N703, N706, N713, N725

USAMMA POC: Materiel Acquisition Directorate, 301-619-7403, DSN 343-7403
UNIT PRICE: $660.60

Description: Six cubic foot under counter refrigerator/freezer fits easily under lab benches and casework. Forced air ventilation eliminates need for clearance space in built-in applications. Manual defrost, 5.3 cubic foot refrigerator capacity and .7 cubic foot freezer capacity. Dual voltage capable, carrying handles and olive drab paint scheme.

Characteristics

Overall Dimensions		
	Height	**34 in**
	Width	**23 7/8 in**
	Depth	**24 in**
Weight	**120 lbs**	
Cubic Ft	**17.2 Cu Ft**	
Refrigerant	**Uses R-134A Refrigerant**	
Power Supply	**Dual voltage120/220 VAC 50/60 Hz 320 Watts, 1200 Watt surge**	

REFRIGERATOR-FREEZER OPTIONAL ACCESSORY

NSN	Notes	Nomenclature	PN	QTY	UI	Unit Price	Total Price	MFG	Shelf Life, months	Refrig Y/N	CONUS Ship Time, weeks
6685015296385	OPTIONAL ITEM	Temperature Monitor/Alarm	TMAF	1	EA	$218.00	$218.00	MARVEL INDUSTRIES	N/A	N	2

COMPANY IS OUT OF BUSINESS
ITEMS ARE STILL IN STOCK

SINK UNIT SURGICAL SCRUB **TOC**

RAN-PAIGE CO INC
MODEL 0200-96-C-8509

AAC "W" ITEM NSN 6530-01-431-9005
AAC "J" ITEM NSN 6530-01-429-6715

UA's: 3267, 4901, 4905, 4912, 5267, F301, F306, F308, F309, N301, N303, N305, N306, N 308, N309, N310, N311, N312, N313, N316, N436, N503, N504 N506, N513, N523, N703, N706, N713, N725

USAMMA POC: Materiel Acquisition Directorate, 301-619-7403, DSN 343-7403
UNIT PRICE: $946.74

Special Features: Portable and light weight. Consists of a hollow tubular frame support, a plastic polypropylene basin, a pump and a heater, a foot pedal and associated tubing and electrical components. Electrical and water are activated by the foot pedal. The water heater is an encapsulated inline type 1200 to 1300 Watts. The maximum water temperature is 125 degrees. This includes a reusable container.

CHARACTERISTICS

Dimensions	**Height**	**N/A**
	Width	**N/A**
	Depth	**N/A**
Weight	**59 lbs**	
Cubic ft	**6.16**	
Power Requirements	**115/230 VAC, 50/60 Hz** **1300 Watts**	