TB MED 521

TECHNICAL BULLETIN

OCCUPATIONAL AND ENVIRONMENTAL HEALTH

MANAGEMENT AND CONTROL OF DIAGNOSTIC, THERAPEUTIC, AND MEDICAL RESEARCH X-RAY SYSTEMS AND FACILITIES

APPROVED FOR PUBLIC RELEASE: DISTRIBUTION IS UNLIMITED

HEADQUARTERS, DEPARTMENT OF THE ARMY
26 FEBRUARY 2002

TECHNICAL BULLETIN

NO. MED 521

HEADQUARTERS
DEPARTMENT OF THE ARMY
WASHINGTON, DC, *26 February 2002*

OCCUPATIONAL AND ENVIRONMENTAL HEALTH MANAGEMENT AND CONTROL OF DIAGNOSTIC, THERAPEUTIC, AND MEDICAL RESEARCH X-RAY SYSTEMS AND FACILITIES

APPROVED FOR PUBLIC RELEASE;
DISTRIBUTION IS UNLIMITED

You can help improve this bulletin. If you find any mistakes or if you know a way to improve procedures, please let us know. Send your comments and suggested improvements on DA Form 2028 (Recommended Changes to Publications and Blank Forms) direct to HQDA (DASG-HS-PM), 5109 Leesburg Pike, Falls Church, VA 22041-3258.

	Paragraph	*Page*
Chapter 1. GENERAL		
Section I. Introduction		
Purpose	1–1	1–1
Scope	1–2	1–1
References	1–3	1–1
Explanation of abbreviations and terms	1–4	1–1
Procedures	1–5	1–1
Section II. General Requirements		
Training and qualifications of operators of x-ray equipment	1–6	1–4
Acquisition, design, construction, and installation	1–7	1–5
Medical materiel complaints and improvement recommendations	1–8	1–6
Food and Drug Administration recalls	1–9	1–6
Maintenance and calibration	1–10	1–6
Disposal of x-ray equipment	1–11	1–6
Disposal of oil-filled, high-voltage generators (transformers)	1–12	1–6

*This bulletin supersedes TB MED 521, 15 June 1981.

		Paragraph	Page
Chapter 2.	MEDICAL MAINTENANCE PROCEDURES		
Section I.	Manufacture, Overhaul, Repair, Assembly, and Reassembly of Diagnostic X-ray Components		
	Scope	2–1	2–1
	Equipment types	2–2	2–1
	Component manufacturer's procedures	2–3	2–1
	U.S. Army Medical Materiel Agency's Medical Maintenance Operation Division's procedures	2–4	2–1
	Loan of x-ray components/temporary installation	2–5	2–2
Section II.	Maintenance and Calibration/Verification Program for Diagnostic X-ray Equipment		
	Scope	2–6	2–2
	Maintenance requirements	2–7	2–2
	Instrumentation calibration	2–8	2–3
	Accessory components	2–9	2–3
Chapter 3.	RADIATION PROTECTION/USER STANDARDS		
Section I.	Introduction		
	Scope	3–1	3–1
	General concepts	3–2	3–1
Section II.	General Standards for the Use of Ionizing Radiation		
	Access to x-ray equipment	3–3	3–1
	General practices	3–4	3–1
	Mobile and portable radiographic x-ray systems (except dental)	3–5	3–2
	Fluoroscopic x-ray systems	3–6	3–2
	Mammographic x-ray systems	3–7	3–3
	Dental x-ray systems	3–8	3–3
	Cardiac x-ray systems	3–9	3–3
	Veterinary x-ray systems	3–10	3–4
Section III.	The Effect of Radiographic Technique Factors on Patient Dose and Image Quality		
	Exposure measurements and image quality	3–11	3–4
	Radiographic technique factors	3–12	3–4
Chapter 4.	DESIGN REQUIREMENTS AND PERFORMANCE STANDARDS FOR X-RAY SYSTEMS AND FACILITIES		
Section I.	Diagnostic X-ray Systems		
	Scope	4–1	4–1
	General standards	4–2	4–1
	Radiographic systems	4–3	4–1
	Mobile radiographic x-ray systems	4–4	4–6
	Mammographic x-ray systems	4–5	4–6
	Tomographic x-ray systems	4–6	4–6
	Fluoroscopic x-ray systems	4–7	4–6
	Cardiac x-ray systems	4–8	4–8
	Computed tomography	4–9	4–9
	Other radiographic x-ray systems	4–10	4–9

			Paragraph	Page
Section	II.	Design or Modification of Diagnostic X-ray Facilities		
		Scope	4–11	4–10
		Evaluation of design plans	4–12	4–10
		Design of diagnostic x-ray rooms	4–13	4–10
		Evaluation of protective barriers	4–14	4–11
		Therapeutic x-ray and LINAC facility design requirements	4–15	4–11
		Other x-ray facilities	4–16	4–11
		Posting requirements	4–17	4–11
Chapter	5.	SURVEYS OF DIAGNOSTIC X-RAY SYSTEMS		
Section	I.	Introduction		
		Scope	5–1	5–1
		Quality assurance programs	5–2	5–1
Section	II.	X-ray Surveys		
		General	5–3	5–1
		Radiographic systems	5–4	5–2
		Dental systems	5–5	5–2
		Veterinary systems	5–6	5–2
		Mammographic systems	5–7	5–3
		Fluoroscopic systems	5–8	5–3
		Computed tomographic systems	5–9	5–3
		Assessment of image quality and entrance skin exposure	5–10	5–3
		Personal protective equipment	5–11	5–4
		Facility surveys	5–12	5–4
Chapter	6.	IMAGE QUALITY ASSURANCE/QUALITY CONTROL PROGRAM FOR DIAGNOSTIC X-RAY SYSTEMS AND ANCILLARY EQUIPMENT		
Section	I.	Introduction		
		Scope	6–1	6–1
		General	6–2	6–1
		Monitoring and evaluation process	6–3	6–1
Section	II.	Image Quality Control Procedures		
		Processing quality control	6–4	6–2
		Image receptor quality control and viewboxes	6–5	6–3
		Darkroom quality control	6–6	6–3
		Repeat analysis	6–7	6–3
		Dental radiographic facilities	6–8	6–3
		Mammographic radiographic facilities	6–9	6–4
Chapter	7.	USE OF MEDICAL AND DENTAL FIELD X-RAY SYSTEMS		
		Scope	7–1	7–1
		Procedures	7–2	7–1
		General	7–3	7–1
		Applicability of radiation safety requirements for field x-ray systems	7–4	7–2
		Requirements for units with field x-ray systems	7–5	7–2
		Waivers during military operations	7–6	7–3

		Paragraph	Page
Chapter 8.	THERAPEUTIC X-RAY SYSTEMS		
Section I.	Introduction		
	Scope	8–1	8–1
	Medical physicist	8–2	8–1
Section II.	Therapeutic X-ray Systems with Energies Up to 1 Megavolt		
	User standards	8–3	8–1
	Equipment design requirements and performance standards	8–4	8–1
	Calibrations and spot checks	8–5	8–3
	Facility design	8–6	8–3
Section III.	X-ray and Electron Therapy Systems with Energies of 1 Megavolt and Above		
	User standards	8–7	8–4
	Equipment design requirements	8–8	8–4
	Calibrations and spot checks	8–9	8–7
	Facility design	8–10	8–8
	Facility surveys	8–11	8–9
Chapter 9.	QUALITY ASSURANCE/QUALITY CONTROL IN RADIATION THERAPY		
Section I.	Introduction		
	General	9–1	9–1
	Quality assurance program	9–2	9–1
	Equipment quality control program	9–3	9–2
	Safety instructions	9–4	9–3
Section II.	Misadministration Reporting Requirements		
	Misadministrations	9–5	9–3
	Records and reports of misadministrations	9–6	9–3
Chapter 10.	RECORDS AND REPORTING REQUIREMENTS		
	Scope	10–1	10–1
	Equipment log requirements	10–2	10–1
	Submission of Form FDA 2579	10–3	10–1
	Retention and disposition of Form FDA 2579	10–4	10–1
	Supply of Form FDA 2579	10–5	10–2
	Actions required	10–6	10–2
	Calibration and survey records	10–7	10–2

APPENDIXES.	A.	REFERENCES	A–1
	B.	PATIENT EQUIVALENT PHANTOM SPECIFICATIONS	B–1
	C.	SAMPLE QUALITY ASSURANCE MANUAL	C–1
	D.	SENSITOMETRIC TECHNIQUE FOR THE EVALUATION OF PROCESSING	D–1
	E.	PROCEDURES FOR ESTABLISHING OPERATING LEVELS	E–1
	F.	PROCESSOR MONITORING	F–1
	G.	PROCEDURES FOR FILM CROSSOVER	G–1
	H.	DARKROOM FOG TESTING PROCEDURES	H–1

GLOSSARY GLOSSARY–1

INDEX INDEX–1

LIST OF TABLES

Number	Title	Page
4–1	Minimum HVLs	4–12
4–2	Aluminum equivalent of material between patient and image receptor	4–12
5–1	Presidential ESE guides	5–5
5–2	Free-in-air chest ESE (mR) at 23 cm by relative film-screen speed	5–5
5–3	Free-in-air abdomen ESE (mR) at 23 cm by relative film-screen speed	5–5
5–4	Free-in-air LS spine ESE (mR) at 23 cm by relative film-screen speed	5–5
5–5	Acceptable x-ray exposure ranges using the dental phantom	5–6
8–1	Maximum energy values and x-ray absorbed dose fractions	8–9
8–2	Maximum photon energy values and absorbed dose fractions	8–9
G–1	Changing control film batches	G–1

LIST OF FIGURES

Number	Title	Page
6–1	Dental clinic monthly radiation QA report worksheet (Sample)	6–5
7–1	Radiation protection program evaluation checklist (Sample)	7–5
B–1	CDRH patient equivalent acrylic and aluminum standard chest phantom (All dimensions are in cm)	B–2
B–2	CDRH patient equivalent acrylic and aluminum standard abdomen and lumbo-sacral phantom (All dimensions are in cm)	B–2
B–3	CDRH patient equivalent acrylic and aluminum standard intraoral dental phantom	B–3
C–1	Sample medical radiology QA manual	C–2
D–1	STEP number vs. optical density for sensitometer (H and D curve)	D–3
D–2	Sample STEP worksheet	D–4
F–1	X-ray processing control chart (Sample)	F–9
H–1	Example of film with three exposed areas	H–2

CHAPTER 1
GENERAL

Section I. INTRODUCTION

1–1. Purpose

a. This bulletin provides procedures for the acquisition, installation, calibration, maintenance, evaluation, use, and disposal of diagnostic, therapeutic, and medical research x-ray systems; and for the acquisition, design, and evaluation of facilities for such systems. These procedures implement the Department of the Army (DA)—

(1) Radiation safety program policies prescribed in Army Regulation (AR) 11–9.

(2) Medical logistics policies prescribed in AR 40–61.

b. This bulletin also implements the provisions of—

(1) Title 21, Code of Federal Regulations (CFR), chapter 1, subchapter J.

(2) Volume 43, Federal Register, p. 4377 (43 FR 4377).

(3) U.S. Department of Health and Human Services (HHS) Publication, Food and Drug Administration (FDA) 91–8203, Sections F.8 and F.9.

c. This bulletin implements selected provisions of—

(1) National Council on Radiation Protection and Measurements (NCRP) Reports No. 35, 36, 49, 79, 99, and 102.

(2) American Association of Physicists in Medicine (AAPM) Reports No. 25, 31, 46, and 51.

1–2. Scope

a. This bulletin applies to all Active Army, U.S. Army National Guard (ARNG), and U. S. Army Reserve (USAR) elements worldwide that acquire, possess, install, calibrate, maintain, evaluate, use, or dispose of diagnostic, therapeutic, or medical research x-ray systems.

b. All U. S. Army contractors worldwide that install, calibrate, maintain, evaluate, or use diagnostic, therapeutic, or medical research x-ray systems will comply with the provisions of this bulletin or with State or national requirements, whichever is more stringent.

1–3. References

Appendix A provides a list of references and forms.

1–4. Explanation of abbreviations and terms

The glossary contains a list of the abbreviations and special terms used in this bulletin.

1–5. Procedures

a. The Director of Army Safety (DASAF). The DASAF serves as the proponent for Army radiation safety per AR 10-5 (see AR 11-9).

b. The Surgeon General (TSG). In addition to the responsibilities in AR 10-5, TSG will—

(1) Provide technical guidance to—

(a) DA, ARNG, and USAR to implement 21 CFR, chapter 1, subchapter J, and consensus standards relating to diagnostic x-ray systems.

(b) DA to implement consensus standards relating to the use of therapeutic x-ray systems.

(2) Maintain a liaison with the Center for Devices and Radiological Health (CDRH).

c. Commanders, major Army commands (MACOMs). In addition to the responsibilities in AR 10-87, each MACOM commander will—

(1) Ensure that subordinate commands comply with 21 CFR, chapter 1, subchapter J, and the provisions of this bulletin.

(2) Provide adequate resources to subordinate commands to support the DA Radiation Protection Program (RPP).

(3) Ensure that a qualified expert performs an evaluation of the radiation shielding in design plans for new radiographic facilities or modifications to existing radiographic facilities prior to the start of construction or modification per AR 11-9, paragraph 2-1*c* and chapter 4, section II, of this bulletin.

d. Commanding General, U.S. Army Medical Command (MEDCOM). In addition to the responsibilities in AR 10-87 and the specific procedures in *b* above, the Commander, MEDCOM, will task the U.S. Army Medical Department Center and School (AMEDDC&S) to develop adequate training programs for—

(1) Medical maintenance personnel performing the assembly, reassembly, maintenance, calibration, or acceptance testing of diagnostic, therapeutic, and medical research x-ray systems. The AMEDDC&S coordinates with U.S. Army Medical Materiel Agency (USAMMA) for staff advice and assistance in developing these training programs.

(2) Health physics personnel who perform radiation protection, compliance, and quality assurance (QA) surveys, or acceptance tests of diagnostic and medical research x-ray systems. The AMEDDC&S coordinates with the U.S. Army Center for Health Promotion and Preventive Medicine (USACHPPM) for staff advice and assistance in developing these training programs.

Note

Any individual that does not meet the training and experience requirements in paragraph 1-6*g* for a medical physicist should not perform surveys or acceptance testing of therapeutic x-ray systems.

e. Commander, USAMMA. In addition to the responsibilities in AR 40-61, the Commander, USAMMA will—

(1) Ensure that x-ray tube housing assemblies manufactured by USAMMA maintenance activities meet the standards in 21 CFR, chapter 1, subchapter J.

(2) Recommend corrective action for diagnostic x-ray systems that do not comply with 21 CFR, chapter 1, subchapter J.

(3) Forward completed copies of Form FDA 2579 (Report of Assembly of a Diagnostic X-ray System) to CDRH, 1350 Piccard Drive, Rockville, MD 20850.

(4) Maintain compliance data, to include a summary of acceptance testing information, for the life of each certified diagnostic x-ray system.

(5) Maintain records and compile reports for CDRH as required by 21 CFR 1002. Forward a copy of each report sent to CDRH to the Office of The Surgeon General's Radiological Consultant at TSG, ATTN: DASG-ZH, 5109 Leesburg Pike, Falls Church, VA 22041-3258.

Note

The consultant is not physically located at the address provided in (5) above. We did not provide a direct address in this bulletin because the consultant's actual location may change periodically; however, a direct address can be obtained from the Regional Medical Commands (RMCs) or the USACHPPM.

(6) Coordinate with the AMEDDC&S in the development of adequate training programs for medical maintenance personnel performing the assembly, reassembly, maintenance, calibration, or acceptance testing of diagnostic, therapeutic, and medical research x-ray systems.

(7) Develop and publish programs for the maintenance and calibration of diagnostic medical and dental x-ray systems, as necessary.

(8) Provide acquisition specifications for diagnostic x-ray systems to the procuring organization, upon request.

(9) Act as a point of contact for reviewing questions and resolving problems and interpretations relevant to 21 CFR, chapter 1, subchapter J, regarding assembly, calibration, and maintenance of x-ray systems.

(10) Participate in quad-service development of Department of Defense (DOD) approved acceptance testing protocols that are used by the Defense Supply Center–Philadelphia (DSCP).

(11) Maintain a listing of diagnostic x-ray systems used in the clinical care of patients.

(12) Perform acceptance testing on selected diagnostic x-ray systems based on the cost, the complexity, the local activity's resources, and the availability of qualified persons.

f. Commander, USACHPPM. In addition to the responsibilities in AR 40-5, the commander, USACHPPM, will—

(1) Conduct radiation protection, compliance, and QA surveys of diagnostic and medical research x-ray systems at facilities without qualified personnel, at the request of the RMCs.

(2) Perform acceptance testing of diagnostic x-ray systems as requested by the DSCP or the RMCs.

(3) Perform acceptance testing of other x-ray systems as requested by the RMCs.

(4) Review the RPPs at the RMCs to include the records of surveys provided in support of facilities in the regions every 3 years.

(5) Review the RPPs at other medical and dental facilities as requested by the RMCs.

(6) Conduct shielding evaluations of architectural design plans for new radiographic facilities or modifications of existing radiographic facilities per chapter 4 of this bulletin.

(7) Evaluate all diagnostic x-ray systems prior to type classification and acquisition for DA.

(8) Develop and maintain the Diagnostic X-Ray Survey Procedures Manual and survey worksheets for use in the evaluation of radiologic facilities and equipment.

(9) Provide copies of reports of radiation protection, acceptance, and QA surveys of diagnostic x-ray systems to Commander, USAMMA, ATTN: MCMR-MMM, Frederick, MD 21701-5001.

g. Commanders, outside continental United States (OCONUS) major medical commands. Each commander of an OCONUS medical command will—

(1) Ensure that subordinate commands comply with 21 CFR, chapter 1, subchapter J, and the provisions of this bulletin.

(2) Ensure compliance with applicable Status of Forces Agreements (SOFA).

(3) Provide adequate resources to subordinate commands to support the DA RPP.

(4) Ensure that a qualified expert performs a shielding evaluation of design plans for new radiographic facilities or modifications to existing radiographic facilities prior to the start of construction or modification per AR 11-9, paragraph 2-1c and chapter 4, section II, of this bulletin.

(5) Ensure that acceptance, compliance, and radiation protection surveys are performed for diagnostic, therapeutic, and medical research x-ray systems within the command per this bulletin.

(6) Forward copies of the acceptance testing report directly to the DSCP with an information copy to USAMMA's Medical Maintenance Operations Division (MMOD), Building T255, Tracy Location, Defense Distribution Region West, P.O. Box 960001, Stockton, CA 95296-0970.

h. Commander, U.S. Army Health Facilities Planning Agency (USAHFPA). The Commander, USAHFPA, will forward design plans for new radiographic facilities or modifications to existing radiographic facilities to a qualified expert for a shielding evaluation prior to the start of construction or modification per chapter 4 of this bulletin.

i. Commanders, RMCs. The commander of each RMC will—

(1) Conduct radiation protection, compliance, and QA surveys of diagnostic and medical research x-ray systems at facilities within their region that do not have qualified personnel to determine compliance with this bulletin and 21 CFR, chapter 1, subchapter J. These facilities include non-MEDCOM organizations, such as ARNG, USAR, table of organization and equipment (TOE) units, and Military Entrance Processing Stations (MEPS).

(2) Review radiation protection, compliance, and QA survey reports and records maintained at facilities within their region that have qualified personnel.

(3) Review the RPPs at medical and dental facilities within their region at least every 3 years.

(4) Conduct shielding evaluations of architectural design plans for new radiographic facilities or modifications of existing radiographic facilities within their region per chapter 4 of this bulletin.

(5) Request support from the USACHPPM if they are unable to provide the above services within a timeframe that would ensure compliance with the provisions of this bulletin.

(6) Provide copies of reports of radiation protection, acceptance, and QA surveys of diagnostic x-ray systems to Commander, USAMMA, ATTN: MCMR-MMM, Frederick, MD 21701-5001.

j. Commanders, fixed medical and dental treatment facilities. Each commander will—

(1) Appoint, in writing, a radiation protection officer (RPO) per AR 11-9.

(2) Provide adequate resources to support the DA RPP.

(3) Permit only qualified persons with specific delineated clinical privileges to use x-ray systems for the clinical care of human patients.

(4) Ensure that all occupationally exposed individuals receive initial and annual training in radiation protection practices, biological effects of ionizing radiation, and the risks of radiation exposure.

(5) Establish written safety procedures, and ensure that personnel follow them.

(6) Ensure that assembly, reassembly, repair, and maintenance of diagnostic x-ray systems and components are according to the manufacturer's instructions, 21 CFR 1020.30, and the provisions of this bulletin.

(7) Ensure that assembly, reassembly, repair, and maintenance of therapeutic x-ray systems and components are according to the manufacturer's instructions, this bulletin, and accepted industry standards.

(8) Ensure that radiation protection, compliance, QA surveys, and acceptance tests of diagnostic x-ray systems are performed as specified in chapter 5 of this bulletin.

(9) Remove all uncertified field x-ray systems from routine use in the clinical care of human patients as soon as practical.

(10) Ensure that all test, measurement, and diagnostic equipment (TMDE) and other equipment used in the calibration and maintenance of x-ray equipment and instruments is calibrated per AR 750-43, Technical Bulletin (TB) 43-180, and TB 750-25.

(11) Ensure that all information relating to the installation, repair, calibration, and compliance testing of diagnostic, therapeutic, and medical research x-ray systems, to include complaint or warranty actions, is incorporated into the U.S. Army Medical Department Property Accounting System (AMEDDPAS) or applicable historical data records. (See chapter 10.)

(12) Report all defects in diagnostic, therapeutic, and medical research x-ray systems that may result in unsafe conditions through command channels to the Commander, USAMMA, ATTN: MCMR-MMM, Frederick, MD 21701-5001, per paragraph 1-8 of this bulletin.

k. Commanders, field medical and dental units. Each commander will ensure the requirements of chapter 7 of this bulletin are met.

l. RPO. In addition to the duties in AR 11-9 and Technical Bulletin, Medical (TB MED) 525, the RPO will—

(1) Review all written radiation protection standing operating procedures (SOPs) within the facility for accuracy at least annually.

(2) Review the purchase orders for all diagnostic, therapeutic, and medical research x-ray devices.

(3) Maintain a registry of all diagnostic, therapeutic, and medical research x-ray systems. This registry shall include—

(a) The location of the system (building and room number).

(b) Manufacturer (model and serial number(s) of the x-ray control and tube housing).

(c) Type of equipment (accelerator, x-ray, etc.).

(d) Use (general medical radiographic, dental panoramic, dental cephalometric, etc.).

(e) Stationary or mobile.

(f) The maximum tube potential (kilovolts-peak (kVp)).

(g) Maximum tube current (milliampere (mA)) or maximum product of tube current and exposure time, (milliampere-seconds (mAs)).

(h) Certification status of the system (that is, certified or uncertified).

(i) Date of the last radiation protection survey.

(4) Ensure that occupationally exposed individuals receive initial and annual training concerning radiation protection practices, the biological effects of ionizing radiation, and the risks of radiation exposure. Specifically, training shall be provided for the following individuals:

(a) Radiologists and other physician users.

(b) X-ray technologists and technicians.

(c) Medical equipment maintenance personnel.

(d) Others determined to be occupationally exposed to ionizing radiation.

(5) Ensure each individual signs a statement acknowledging receipt of the training in (4) above, and maintain the signed statements per AR 25-400-2.

(6) Maintain records of radiation protection and QA surveys of all x-ray systems and documentation of the completion of any corrective actions for at least 3 years.

Section II. GENERAL REQUIREMENTS

1–6. Training and qualifications of operators of x-ray equipment

a. The duties performed by the medical x-ray specialists and the skills and knowledge necessary to perform these duties are set forth in DA Pam 611-21. Medical x-ray technologists will have completed the X-Ray Specialist Course (313-91P10) or equivalent as determined by a competent medical authority prior to performing independent medical diagnostic x-ray procedures in an Army military treatment facility (MTF). The selected course will be a program in radiologic technology provided by an educational institution accredited by the Association of Colleges and Schools or by the Joint Review Committee on Education in Radiologic Technology.

b. The duties performed by dental specialists and the skills and knowledge necessary to perform these duties are set forth in DA Pam 611-21. TC 8-20-1 is a reference used in the training of the dental specialist and has a guide for performing his or her duties. Dental x-ray technologists will have completed the Dental Specialist Course (330-91E10) or equivalent as determined by the Chief of Dental Activities prior to performing independent dental diagnostic x-ray procedures in an Army dental facility. Independent operators of dental x-ray systems will be individuals having adequate knowledge of radiation protection principles and practices. These individuals will be qualified by didactic training and experience programs consistent with the Guidelines of Dental Hygienist and Dental Assistant Training Programs in Dental Radiology adopted by the Oral Radiology Section of the American Association of Dental Schools.

c. When student technologists are undergoing training, they will be supervised by a qualified radiologic technologist at all times. They will not be on duty or on call alone until they are in the final phase of clinical training and have been approved by the education/training program director.

d. Limited privileged x-ray technologists are those individuals who do not meet the qualifications as stated above. Limited privileged x-ray technologists may perform single or limited x-ray examinations, such as operating automatic chest x-ray systems. Paramedical personnel, such as nurses and laboratory technologists, will not operate diagnostic x-ray systems. The use of such equipment could be warranted in a life-saving situation, during which qualified personnel as specified above are not available to perform the x-ray examination.

e. Medical fluoroscopy will be performed only by or under the immediate supervision of physicians properly trained in fluoroscopic procedures and

credentialed through the facility's medical credentialing process. When used for medical purposes, fluoroscopic x-ray systems will be provided with image-intensification. When used by nonradiology specialists, the fluoroscopic x-ray systems will have image-intensification with a last image-hold feature.

f. All x-ray systems used for radiation therapy will be used by or under the supervision of a radiation oncologist who has specialized training in radiation therapy. The users of x-ray therapy systems will be approved by the Credentialing Committee per AR 40-400. Any person authorized to use therapeutic x-ray systems without supervision will be a physician who—

(1) Is certified in—

(a) Radiology or therapeutic radiology by the American Board of Radiology (ABR).

(b) Radiation oncology by the American Osteopathic Board of Radiology.

(c) Radiology, with specialization in radiotherapy, as a British "Fellow of the Faculty of Radiology" or "Fellow of the Royal College of Radiology".

(d) Therapeutic radiology by the Canadian Royal College of Physicians and Surgeons.

(2) Is in the active practice of therapeutic radiology and has had classroom and laboratory training in the basic techniques applicable to the use of a linear accelerator (LINAC) or teletherapy system, supervised work experience, and supervised clinical experience as follows:

(a) Two hundred hours of classroom and laboratory training that includes—

1. Radiation physics and instrumentation.

2. Radiation safety.

3. Mathematics pertaining to the use and measurement of ionizing radiation.

4. Radiation biology.

(b) Five hundred hours of supervised work experience under the supervision of an authorized user at a medical institution that includes—

1. Reviewing the full calibration measurements and periodic spot checks.

2. Preparing treatment plans and calculation treatment times.

3. Using administrative controls to prevent misadministrations.

4. Implementing emergency procedures.

5. Checking and using survey meters.

(c) Three years of supervised clinical experience that includes one year in a formal training program approved by the Residency Review Committee for Radiology of the Accreditation Council for Graduate Medical Education, or Committee on Postdoctoral Training, or American Osteopathic Association.

(d) Two years of clinical experience in therapeutic radiology under the supervision of an authorized user at a medical institution that includes—

1. Examining individuals and reviewing their case histories to determine suitability for radiation therapy treatment.

2. Selecting the proper dose and how it is to be administered.

3. Calculating the therapy doses and collaborating with the authorized user in the review of patients progress and consideration of the need to modify originally prescribed doses.

4. Post-administration follow-up and review of case histories.

g. The medical physicist will be an individual who—

(1) Is certified by the ABR in—

(a) Therapeutic radiology physics.

(b) Radiological physics.

(2) Is certified by the American Board of Medical Physics in Radiation Oncology Physics.

(3) Is certified by the Canadian College of Physicists in Medicine in Therapeutic Radiological Physics.

(4) Holds a master's or doctor's degree in physics, biophysics, radiological physics, or health physics; and has completed 1 year of full time training in therapeutic radiological physics and an additional year of full time work experience under the supervision of a teletherapy or medical physicist meeting the requirements of (1), (2), or (3) above at a medical institution that includes the medical use of sealed and brachytherapy sources and full calibration measurements, periodic spot checks, and safety checks for LINAC facilities.

h. The training and experience specified in *f* and *g* above must have been obtained within 5 years preceding the date of employment or application, or the individual must have had continuing education and experience since the required training and experience was completed.

1-7. Acquisition, design, construction, and installation

a. When procuring diagnostic, therapeutic, and medical research x-ray systems, follow the policies and procedures of AR 40-61 and Supply Bulletin (SB) 8-75-Medical Care Support Equipment (MEDCASE).

b. All new acquisitions of diagnostic x-ray systems for use on human beings will meet certification requirements per FDA standards and 21 CFR, chapter 1, subchapter J.

c. All new acquisitions of therapeutic x-ray systems will meet the requirements of chapter 8 of this bulletin.

d. All diagnostic, therapeutic, and medical research x-ray equipment acquired will meet the basic requirements for safe construction, performance, and mechanical integrity as identified by the Underwriters' Laboratories (UL), Inc. in UL Report 187; the National Fire Protection Association (NFPA) as specified in NFPA Standards 70 and 99; and by other appropriate Federal and consensus standards. This should not be interpreted to mean that an x-ray system must have a UL label or be UL listed.

e. The design and installation of diagnostic, therapeutic, and medical research x-ray equipment that will be operated in an explosive atmosphere will meet the requirements of the NFPA in the National Fire Codes and UL safety standards for such use.

f. During the design and construction or modification of x-ray facilities, consider the shielding requirements in this bulletin and the recommendations in NCRP Report No. 49; TM 5-805-12; Architectural and Engineering Instructions, Medical Design Standards; Corps of Engineers Guide Specification (CEGS)-13090; and Military Handbook (MIL-HDBK) 1191 or equivalent host nation standards.

1–8. Medical materiel complaints and improvement recommendations

a. Submit a Standard Form (SF) 380 (Reporting and Processing Medical Materiel Complaints/ Quality Improvement Report) (see AR 40-61), with supporting documentation, through command channels when—

(1) A certified diagnostic x-ray system or specified component does not comply with the requirements of 21 CFR.

(2) A diagnostic, therapeutic, or medical research x-ray system is defective or has malfunctioned to the extent that it is unsatisfactory for use or use of the equipment has caused or may cause injury or death. Classify defective or unsatisfactory medical materiel as a Type I, II, or III complaint. (See AR 40-61.)

b. In the case of a Type I complaint, immediate notification to DSCP is required.

c. Submit an SF 364 (Report of Discrepancy) (see AR 40-61) for equipment received in a nonoperational or unusable condition.

d. Submit an SF 368 (Product Quality Deficiency Report), per DA Pamphlet (DA Pam) 738-750, to identify and initiate corrective action on nonmedical equipment or material that could be used in support of a medical mission.

1–9. Food and Drug Administration recalls

a. The FDA issues recall notifications on noncomplaint x-ray systems. Such recalls will be published in SB-8-75 series bulletins or by message from USAMMA.

b. Supply accounts at the installation medical support activity level will monitor and maintain a record, either automated or manual, of quality control (QC) information to include FDA recalls.

1–10. Maintenance and calibration

Qualified medical equipment repair (MER) or contract service personnel will perform maintenance and calibration of diagnostic and therapeutic x-ray systems and ancillary equipment according to procedures established by the manufacturer and this bulletin.

1–11. Disposal of x-ray equipment

a. When x-ray equipment is determined to be unserviceable, uneconomically repairable, or otherwise unsuitable for the clinical care of human patients, it will be condition coded H (AR 725-50 and DOD 4160.21-M) and marked CONDEMNED — NOT FOR PATIENT CARE (AR 40-61) prior to turn-in for disposal through Defense Reutilization and Marketing Offices (DRMO).

b. The DRMO will ensure that no x-ray equipment condition coded H is sold, transferred, or donated for the clinical care of human patients.

c Donated certified or uncertified x-ray systems will contain the caution statement from DOD 4160.21-M, chapter VI, paragraph 86.

1-12. Disposal of oil-filled, high-voltage generators (transformers)

a. Some high-voltage transformers may contain insulating oil contaminated with polychlorinated biphenyls, which is a U.S. Environmental Protection Agency (EPA) listed carcinogen. Dispose of these transformers per current Federal regulations.

b. Information concerning the handling and disposal of high-voltage generators, sampling of dielectric oils, and submitting oil samples for analysis may be requested from the Commander, USACHPPM, ATTN: MCHB-TS-EHM, 5158 Blackhawk Road, Aberdeen Proving Ground, MD 21010-5403.

CHAPTER 2
MEDICAL MAINTENANCE PROCEDURES

Section I. MANUFACTURE, OVERHAUL, REPAIR, ASSEMBLY, AND REASSEMBLY OF DIAGNOSTIC X-RAY COMPONENTS

2–1. Scope

This section provides procedures regarding the manufacture, overhaul, repair, exchange, assembly, and reassembly of specified components in diagnostic x-ray systems.

2–2. Equipment types

Medical and dental x-ray systems are classified as—

a. Certified. Certified components of x-ray systems will be clearly labeled with the manufacturer's name, model, serial number, and date of manufacture. Only components that influence the x-ray radiograph require labeling.

b. Uncertified. Uncertified components of x-ray systems (manufactured prior to 1 August 1974) do not require labeling and are not required to meet the same performance standards.

c. Combination. Combination x-ray systems are usually uncertified systems upgraded by the addition of certified components or systems that have been modified for investigational or research purposes. The upgraded components usually provide additional functions not originally designed into the equipment.

2–3. Component manufacturer's procedures

a. As a manufacturer recognized by the FDA, USAMMA—

(1) Identifies the model number and serial number on tube housings and beam-limiting devices by permanent legible markings in an area accessible to view.

(2) Affixes a label identifying the manufacturer, model number, and serial number of the x-ray tube contained within the x-ray tube housing assembly.

(3) Where certification is authorized for a system comprised of two or more components, identifies the product with a single inscription, tag, or label.

(4) For x-ray tube housings designed to contain quick-change x-ray tubes, provides the necessary instructions for replacement and new labels to replace those that were applicable to the old x-ray tube.

(5) Provides the assembler with—

(a) Adequate instructions for assembly, installation, adjustment, and testing of each component affected by the performance standards in chapter 4 of this bulletin.

(b) Performance specifications of the component as part of the complete system, when manufacturer's instructions have been followed.

(c) Instructions including identification of other components compatible with the component provided, when compliance of the complete system depends on compatibility.

(d) A schedule of maintenance. If the provided maintenance schedule or instructions pertaining to certified components are not followed, the manufacturer will not be held responsible for performance discrepancies occurring in those specific components.

(e) Other technical information, such as voltage, current requirements, and line regulation.

(6) Scans completed x-ray tube housing assemblies for x-ray leakage radiation at manufacturer's specified leakage technique factors, and provides the results of the scan to the customer.

(7) Provides reports to FDA as required by 21 CFR 1002.

b. Upon request, USAMMA's MMOD—

(1) Determines inherent filtration, dimensions, and location of the effective focal spot.

(2) Provides that information to the customer.

2–4. U.S. Army Medical Materiel Agency's Medical Maintenance Operations Division's procedures

USAMMA's MMOD—

a. Performs maintenance on certified and uncertified x-ray tube housing assemblies for DA and authorized non-DA customers.

b. Provides overhaul or manufacture services for certified and uncertified x-ray tubes and x-ray tube housings. Overhaul of uncertified x-ray tube housing assemblies constitutes a repair, not manufacture; therefore, regulations regarding certification do not apply.

c. Provides direct exchange of x-ray tube heads when the defective item is—

(1) Certified and the exchange item is both certified and compatible.

(2) Uncertified and the exchange item is also uncertified and compatible.

2–5. Loan of x-ray components/temporary installation

a. Loan of x-ray tube assemblies using Medical Standby Equipment Program (MEDSTEP) resources is allowed for DA and authorized non-DA customers.

b. Customers submitting an x-ray tube as a repairable exchange or as a repair and return item will include all trim (fascia), fan housing, end caps, data, and certification labels.

c. Installation of a loaned MEDSTEP component does not require the assembler to prepare Form FDA 2579, since the original component will be returned to the customer. However, the assembler shall clearly label the loaned item as a temporarily installed component and include the assembler's name and signature, company name and complete mailing address, date of installation, and either of the following statements:

"Temporarily installed component. This certified component has been assembled, installed, adjusted, and tested by me according to the instructions provided by the manufacturer."

or

"Temporarily installed noncompatible component. This certified component has been assembled or installed, but could not be assembled, installed, adjusted, and tested according to the instructions provided by the manufacturer because other already existing components of the system do not meet the compatibility specifications of the manufacturer of the certified component being installed, and there are no commercially available certified components of a similar type compatible with the system."

d. An uncertified MEDSTEP component will not be loaned to a customer when the defective component is a certified component.

e. A certified MEDSTEP component will not be loaned to a customer when the defective component is an uncertified component.

Section II. MAINTENANCE AND CALIBRATION/VERIFICATION PROGRAM FOR DIAGNOSTIC X-RAY EQUIPMENT

2-6. Scope

This section provides procedures for the maintenance and calibration of diagnostic x-ray systems. Regular maintenance and calibration—

a. Ensures that the x-ray system performs per chapter 4 of this bulletin.

b. Minimizes mechanical, electrical, or radiation hazards associated with the use of high voltage, x-ray generating equipment.

2–7. Maintenance requirements

The MER or contract maintenance provider will—

a. Perform repair and maintenance of x-ray systems and associated equipment.

b. Conduct technical inspections. Technical inspections consist of visual determination and mechanical/electrical evaluation of the x-ray system for its application from initial acquisition to disposal. These inspections will be done per TB MED 750-1, TB MED 7, and the manufacturer's technical literature.

c. Calibrate or verify performance of in-use equipment. Calibration or verification ensures that mechanical and electrical operation of the x-ray system is not compromised by worn out or defective components. The MER will use the manufacturer's procedures to calibrate or verify the performance of in-use equipment at the manufacturer's specified intervals or annually, whichever is more frequent.

(1) Stored equipment. Perform calibration or verification of stored x-ray equipment per TB MED 1.

(2) In-use TOE. Following initial setup of the x-ray equipment in its field location, the MER will—

(a) Determine the adequacy of the power line.

(b) Perform adjustments to allow use of the system.

(c) Perform calibration or verification of the x-ray equipment, if necessary.

(d) Perform full calibration on the generator or local electrical power at least annually.

d. Prepare documentation including DD Form 2163 (Medical Equipment Verification/Certification), DD Form 2164 (X-Ray Verification/Certification Worksheet), and DA Form 2407 (Maintenance Request), or an automated maintenance record.

Those activities using the new automated non-invasive TMDE may use the printout from such TMDE in lieu of a DD Form 2164, if the printout contains equivalent information.

2–8. Instrumentation calibration

The MER will perform calibration and verification of x-ray systems with instrumentation or TMDE that is calibrated per AR 750-43, TB 750-25, and TB 43-180.

2–9. Accessory components

There are three types of accessory components that may be encountered with diagnostic x-ray systems.

a. An accessory component, such as a cradle or film changer, that is not necessary for compliance with this bulletin. However, this type of accessory component shall be determined compatible with the x-ray system prior to initial use.

b. An accessory component, such as one of a set of interchangeable beam-limiting devices, that is necessary for compliance with this bulletin. These components may be interchanged with similar compatible components without affecting the x-ray system's compliance.

c. Accessory components, such as a table top cassette holder, that do not require compatibility or installation instructions because they are compatible with all x-ray systems.

CHAPTER 3
RADIATION PROTECTION/USER STANDARDS

Section I. INTRODUCTION

3–1. Scope

This chapter provides standards for the radiation protection of patients, occupationally exposed individuals, and the public.

3–2. General concepts

a. The goal of medical, dental, or veterinary use of ionizing radiation is to obtain the highest quality diagnostic information or produce the desired therapeutic effect with an acceptable exposure to the patient and a minimum exposure to the staff and the public.

(1) To achieve this goal the personnel involved must have a working knowledge of many technical and clinical principles and understand their relative importance. Correctly applying these principles can greatly reduce the exposure to all individuals involved.

(2) Rules and regulations alone cannot control radiation exposure. However, following the provisions of this bulletin will control unproductive and unnecessary radiation exposure and assure reasonable protection of patients, occupationally exposed individuals, and the public.

b. Only qualified physicians, dentists, or veterinarians will determine the need for a radiologic examination or treatment, the procedures to be used, and the frequency of their repetition.

Section II. GENERAL STANDARDS FOR THE USE OF IONIZING RADIATION

3–3. Access to x-ray equipment

Only authorized persons will operate x-ray equipment. To prevent unauthorized use, each facility will establish written procedures for controlling access to x-ray suites and control panels. These procedures will include removing enabling keys from mobile x-ray systems, unless the system must be immediately available, such as "stat" or operating room systems. In this case, other means of preventing unauthorized use of the systems should be used.

3–4. General practices

a. Limit the primary beam to the smallest area that is practicable and consistent with the clinical goals of the examination or treatment.

b. Take particular care to accurately align the primary beam with the patient and image receptor. This is especially important in dental radiography.

c. Use the largest tube potential (kVp), filtration, and source-to-skin distance (SSD) practicable, consistent with the clinical goals of the examination. The SSD should be at least 38 centimeters (cm) and shall be at least 30 cm, except for specific surgical applications (such as image intensified C-arm fluoroscopic systems) where the SSD will not be less than 20 cm. Use low dose techniques whenever possible.

d. Take special precautions, consistent with clinical goals, to minimize exposure to the embryo-fetus of patients that are pregnant or suspected of being pregnant.

e. Each department or service should develop a written policy on the use of gonadal shielding. When developing these policies, physicians should consider using specific area gonad shielding on all patients with reasonable reproductive potential. If specific area gonad shielding will not compromise the clinical objectives of the examination, use it in the following situations:

(1) If the gonads lie within the primary beam or within 5 cm of the edge of the primary beam.

(2) Examinations of male patients, such as—

(a) Projections of the pelvis, hip, and upper femur in which the testes are usually in the primary beam.

(b) Projections of the abdomen, lumbar spine, and lumbo-sacral (LS) spine; intravenous pyelograms; and abdominal scout film for barium enemas and upper gastrointestinal (GI) series.

(3) Examinations of female patients in which the uterus or ovaries are usually in the primary beam. Although the use of specific area ovarian shielding is often impractical due to the difficulty in

estimating the exact location of the ovaries, it may be possible in selected views of some examinations.

(4) Specific area gonad shielding will provide attenuation of radiation at least equivalent to that afforded by 0.25 millimeter (mm) of lead.

(5) Both flat contact shielding and shadow shielding are unsuitable for gonad protection during fluoroscopic procedures.

f. Shield the lens of the eyes when they are likely to be exposed to the primary beam, provided such shielding does not compromise useful or required information or proper treatment. Specific lens of the eye shielding will provide attenuation of radiation at least equivalent to that afforded by 2 mm of lead.

g. Use x-ray films, intensifying screens, and other image receptors that are as sensitive as is consistent with the clinical goals of the examination. The light emission spectrum from the screen will match the spectral sensitivity of the film.

h. X-ray film should not be used beyond the indicated expiration date unless the film manufacturer states that the film may be used longer.

i. Unprocessed film will be adequately shielded.

j. Allow only necessary personnel in the radiographic room during an exposure. All such persons will wear a protective apron of at least 0.5 mm lead equivalence or will stand behind a protective barrier having at least the same lead equivalence.

k. When the x-ray system is on, there will be no more than one patient in the x-ray room, even if the room contains two or more x-ray systems. An exception to this is granted for rooms containing two dedicated mammography units with a privacy partition.

l. During an x-ray exposure, the operator will close all doors to the x-ray room and will stand behind the protective barrier. However, the RPO may approve exceptions in cases where the doors are designed to be left open or must be left open due to workflow requirements (for example, cardiac catheterization).

m. Physicians should consider using a posterior-anterior (PA) projection for examination of the thoracic spine of female patients with an increased source-to-image distance (SID) to reduce the dose to the breasts.

n. When a patient must be held in position for radiography or fluoroscopy, use mechanical supporting or restraining devices if possible. The use of these restraints will be reviewed by the MTF's authorities on patient restraint. If an individual must hold the patient, the individual will—

(1) Wear appropriate shielding devices, such as a protective apron and gloves having at least 0.5 mm and 0.25 mm lead equivalence, respectively, or will stand behind a protective barrier having at least the same lead equivalence.

(2) Be in a position that protects any body part from exposure to the primary beam.

o. No individual, especially those occupationally exposed to ionizing radiation, will hold patients on a regular basis. A family member of the patient or another attendant should be asked to hold the patient, if possible.

p. Do not use fluoroscopy as a substitute for radiography. Reserve fluoroscopy for the study of dynamic or spatial relationships and guidance in spot-film recording of critical details.

q. Do not expose an individual to the primary beam exclusively for training or demonstration purposes.

r. Implement a quality assurance program (QAP) for the x-ray systems and film processors per this bulletin.

3–5. Mobile and portable radiographic x-ray systems (except dental)

a. In addition to the requirements of paragraphs 3–3 and 3–4, users of mobile general purpose x-ray systems will—

(1) Use mobile and portable x-ray systems only for examinations when it is impractical to transfer patients to a fixed radiographic system.

(2) Use the maximum tube potential, filtration, and SSD consistent with the conditions of the radiographic examinations.

(3) Stand as far as practical (at least 2 meters (m)) from the patient, the x-ray tube, and the primary beam.

(4) Wear a protective apron of at least 0.5 mm lead equivalence, or stand behind a protective barrier having at least the same lead equivalence.

(5) Allow only necessary personnel to be in the vicinity of the x-ray system during the exposure.

b. The responsible medical supervisor will—

(1) Ensure operators understand the proper use and limitations of mobile equipment to avoid needless exposure to the patient or other persons in the vicinity.

(2) Make provisions to safeguard the enabling key for mobile x-ray systems. Leave the key in the system only if necessary during recharging or for a quick response system (see para 3–3).

3–6. Fluoroscopic x-ray system

a. In addition to the requirements of paragraphs 3–3 and 3–4, the fluoroscopist will—

(1) If using nonimage-intensified fluoroscopic systems, sufficiently dark-adapt his or her eyes and

eliminate any extraneous light that interferes with the fluoroscopic examination prior to starting the examination. The fluoroscopist will not, under any circumstance, increase the exposure factors or prolong the fluoroscopic examination to compensate for inadequate dark-adaptation.

(2) Use the smallest field sizes and shortest exposure times practical.

(3) Take special precautions, consistent with clinical needs, to minimize the exposure of—

(a) The gonads of patients with reasonable reproductive potential.

(b) The embryo-fetus of patients that are pregnant or suspected of being pregnant.

b. To minimize scattered radiation and to protect the hands of the fluoroscopist while inserting catheters, the fluoroscopic x-ray system should have a protective skirt (drape), with a lead equivalent thickness of at least 0.25 mm, hanging from the image receptor.

c. Each person in the fluoroscopy room (except the patient) will wear protective aprons of at least 0.5 mm lead equivalence.

d. If the fluoroscopic procedure involves putting the hand in the primary beam, the fluoroscopist should wear a protective glove of at least 0.25 mm lead equivalence. A wrist or ring dosimeter should be worn under the glove.

e. In x-ray systems with automatic brightness control, the peak tube potential (kVp) and tube current (mA) may rise to high values without knowledge of the operator, particularly if the gain of the intensifier diminishes. The fluoroscopist should be able to monitor the peak tube potential (kVp) and tube current (mA) from his or her operating position. Systems may have meters located at the fluoroscopist's operating position to assist in this monitoring.

f. Physicians properly trained and credentialed in fluoroscopic procedures will either perform or supervise the performance of medical fluoroscopy procedures.

g. Fluoroscopic x-ray systems used for medical procedures will have image intensifiers. If nonradiology specialists use the system, it will have image intensifiers with electronic image-holding capabilities.

h. Physicians properly trained in digital subtraction procedures will either perform or supervise the performance of digital subtraction procedures.

i. The fluoroscopist will take special care to limit patient exposure in serial fluorography and cinefluorography where the tube current (mA) and tube potential (kVp) may be higher than used in standard fluoroscopy.

j. If cumulative patient exposure is measured, the results should be recorded in the patient treatment record.

3–7. Mammographic x-ray systems

a. In addition to the requirements of paragraphs 3–3 and 3–4, users of mammographic x-ray systems will—

(1) Know the technical characteristics of the x-ray systems used. For mammography, these characteristics include target material, window type, filtration, grid, image receptor, and generator.

(2) Use stiff compression parallel to the film surface for screen-film mammography.

b. FDA certification requires a dedicated x-ray system, dose measurements, and special attention to be paid to the film processor QC procedures.

3–8. Dental x-ray systems

a. In addition to the requirements of paragraphs 3–3 and 3–4, users of dental x-ray systems will—

(1) Perform intraoral image receptor radiography using dental film that meets the requirements of American National Standards Institute (ANSI) speed group rating "D" or faster.

(2) Use open-ended, shielded, position-indicating devices (PID) with the paralleling technique to restrict the primary beam to as near the size of the image receptor as possible when performing routine intraoral radiography.

(3) Keep the exposure of the patient to a minimum, consistent with clinical requirements, by using a peak tube potential of at least—

(a) 65 kVp for routine dental radiography.

(b) 50 kVp for endodontic radiography.

(c) 70 kVp for both bitewing and periapical dental projections to reduce the entrance skin exposure (ESE), if the resulting image quality provides the required diagnostic information.

(4) Ensure that only the patient is in the primary beam. The operator will not hold the film during an exposure.

(5) Not handle the tube housing or the PID during exposures.

b. A protective lead apron and a thyroid collar may be used on patients, unless the apron or collar interferes with the diagnostic image. This shielding is not a substitute for adequate beam collimation and alignment.

3–9. Cardiac x-ray systems

a. Physicians properly trained in cardiac fluoroscopic procedures will either perform or supervise the performance of cardiac fluoroscopy.

b. In addition to the requirements of paragraphs

3–3, 3–4, and 3–6, the users of cardiac x-ray systems should—

(1) Step back from the table and behind portable shields during cinefluorographic and serial radiographic procedures when possible.

(2) Keep the number of films per second and the duration of the procedure to a minimum consistent with the diagnostic objectives of the examination during serial radiographic procedures.

c. During diagnostic procedures, the physician should—

(1) Monitor the entrance exposure rate (EER) to the patient.

(2) Ensure that the EER is as low as reasonably achievable (ALARA) yet consistent with the diagnostic needs of the examination.

3–10. Veterinary x-ray systems

In addition to the requirements of paragraph 3–3, the user of veterinary x-ray systems will—

a. Limit the primary beam to the smallest area that is practical and consistent with the clinical goals of the examination or treatment.

b. Use the lowest practical exposure technique factors (time and mA) to minimize the radiation output. The kVp should be consistent with the contrast requirements of the examination.

c. To minimize scatter radiation and to protect the hands of the fluoroscopist while inserting catheters, provide fluoroscopic x-ray systems with a protective skirt (drape) with a lead equivalent thickness of at least 0.25 mm.

d. Use mechanical devices to hold/position film cassettes for large animals.

e. When performing radiographic procedures on animals, use—

(1) Sandbags, V-troughs, slings or other appropriate ancillary devices to help in positioning the animal.

(2) General anesthesia, sedatives, or tranquilizers to sedate the animal.

f. Minimize human exposure to radiography or fluoroscopy by ensuring that—

(1) No individual, especially those occupationally exposed to ionizing radiation, holds animals on a regular basis. Ask the animal handler or another attendant to hold the animal.

(2) Anyone holding animals wears a protective apron and gloves having a lead equivalent thickness of at least 0.5 mm and 0.25 mm, respectively.

g. Ensure that all doors to the x-ray room are closed when the x-ray systems are in operation.

h. Take special precautions when using portable x-ray systems to ensure that exposure to attending personnel is minimized.

i. Maintain a log or equivalent record on the use of the x-ray systems. Include the date of exposure, kVp, mA, exposure time, operator's name, identification of the animal, and the name of any person used to hold the animal during the radiographic procedure.

Section III. THE EFFECT OF RADIOGRAPHIC TECHNIQUE FACTORS ON PATIENT DOSE AND IMAGE QUALITY

3–11. Exposure measurements and image quality

Understanding radiographic technique factors is important because of their effects on patient dose and image quality. The various effects of each radiographic technique factor (or combination thereof) are explained in paragraph 3–12.

3–12. Radiographic technique factors

a. General to all types of radiographic units.

(1) *Tube potential (kVp).* The kVp settings affect the quality (mean energy) of the primary beam, exposure of the patient, and darkness of the film image. Higher kVp settings will result in lower image contrast, increased scatter radiation (which will lead to reduced resolution), and darker films. An increase in kVp must be accompanied by a decrease in mAs for film darkness to remain relatively constant.

(2) *Tube current (mA).* The mA settings should give a linear response (for example, doubling the mA setting should produce twice the radiation exposure). A nonlinear response will lead to varying film darkness and an increase in retake rate. Increasing mA settings increases the overall number of x-rays produced, so a higher mA will produce darker radiographs and increase the patient's radiation dose but will have no influence on subject contrast. Therefore, increasing the mA setting requires a decrease in exposure time for the film darkness to remain the same. The product of tube current and exposure time (mAs) is the single factor that controls the quality of the exposure if the kVp setting remains fixed.

(3) *Radiation output.* Output (milliroentgens (mR)/mAs) is important in determining whether the

system is within normal average ranges. Machines operating above normal average ranges unnecessarily expose the patient, physician, and members of the general public.

(4) *Exposure reproducibility.* For the same technique settings, consecutive exposures should yield identical amounts of radiation and identical film densities. If a system in not reproducible, the image quality and the patient's radiation dose will vary.

(5) *Exposure time accuracy.* Exposure time should be as short as necessary to reduce the patient's radiation dose and to minimize image blur caused by motion. Density of the x-ray image varies directly with exposure time (for the same mA setting), and unreliable exposure timers cause fluctuations in density from one image to the next. This may interfere with the diagnostic information and increase the number of repeated examinations, which increases the patient's radiation dose.

(6) *Phototimer performance.* Phototimers help reduce the patient's radiation dose by terminating the primary beam when the optimal amount of radiation has reached the film. Phototimers must function properly for optimal imaging of the body part involved and for consistent image quality. The backup timer must function to prevent accidental overexposure of the patient. If the minimum exposure time is too long, it is difficult to fully use faster film screen combinations that are designed to reduce patient exposure.

(7) *Light field indication and primary beam alignment.* Most x-ray units provide means to align the primary beam with the patient and to confine the beam to the region of interest. Misalignment introduces distortion into the image and may cause deletion of essential information for diagnosis of the patient's condition. Extension of the primary beam beyond the anatomical region of interest increases the patient's radiation exposure and degrades image quality by introducing excessive scatter into the image. Proper alignment will lessen repeat examinations.

(8) *Beam quality.* The half-value layer (HVL) is a measure of beam quality (effective beam energy) and has a major influence on both image contrast and patient entrance exposure. Sufficient filtration should be present to remove low energy photons from the primary beam. If not removed, these photons increase patient dose without contributing to the diagnostic image. However, if HVL is too high, soft tissue contrast will be limited. A decrease in soft tissue contrast due to a large HVL will give the same effect as an increase in kVp, because a large HVL will attenuate more of the lower energy x-rays causing the average energy of the beam reaching the patient to increase.

(9) *Focal spot size.* The x-ray focal spot is the region of the x-ray target where x-rays appear to originate. The sharpness of the image is dependent on the size of the x-ray tube focal spot. The larger the focal spot, the lower the resolution. A smaller focal spot gives better resolution, but it requires the use of a lower mA setting that results in a longer exposure time. This increase in exposure time may cause patient motion to be a problem.

(10) *SSD.* The patient's radiation dose is strongly dependent on the distance from the x-ray tube to the point that the primary beam enters the patient. The smaller the SSD, the higher the patient dose.

b. Fluoroscopic/Image intensified units.

(1) *Tabletop exposure rate.* The radiation dose to a patient undergoing fluoroscopy is strongly dependent on the distance from the x-ray tube to the table supporting the patient. The radiation dose increases with reduced tube-to-tabletop distance. Knowing the tabletop exposure rate is necessary to ensure that—

(a) The patient is not being excessively exposed.

(b) The rate is sufficient to produce an adequate image.

(2) *Fluoroscopic beam restriction system.* A radiation beam that extends beyond the image receptor results in excessive scattered radiation reaching the image and increased radiation exposure to the patient, the physician, and the attending personnel. When operated in the fluoroscopic imaging mode, the beam restriction system should automatically limit the size of the radiation field to the size of the visual field of the image intensifier.

(3) *Image intensification system.* Performance of the image intensifier and the associated x-ray control system determines the quality of images for fluoroscopy, photospot filming, cinefluorography, and digital subtraction angiography.

(4) *Automatic brightness control.* In fluoroscopy, the automatic brightness control maintains an image of constant brightness on the viewing monitor.

(5) *Resolution and distortion.*

(a) Components in the imaging chain can affect resolution. These components include the focal spot, imaging geometry, the quality and focus of the optical system, image intensifier, video camera, television monitor, and screen-film contact.

(b) The image-intensifier tube, optics, video camera and circuitry, and the television monitor can cause distortion or stretching of the image.

(6) *Image lag.* Lag is the smearing or comet tailing of an image as the camera or fluoroscopic

tower is moved rapidly past a bright light or an area with high radiation level. Increased lag will degrade the quality of the fluoroscopic image.

(7) *Flare.* Flare (that is, additional scattered or reflected light within the imaging system) reduces contrast. Glass surfaces in the imaging chain or any surface in the intensifier, lens, or video camera that has not been painted with flat black paint can reflect light.

c. Computed tomography (CT).

(1) *Mechanical function effects.*

(a) Couch incrementing. Couch incrementing determines the distance between the slices. Errors may cause scan overlaps or gaps between scans on the image. Scan overlaps result in increased patient dose due to multiple irradiations of the same area. Gaps between scans could result in loss of diagnostic information and increase patient dose due to repeated examinations.

(b) Laser alignment. Misalignment of this parameter will cause the slice to be off the intended area. This may require additional slices and additional exposure to the patient.

(2) *Dose measurement effects.*

(a) Radiation profile. Radiation profile is the thickness of the radiation beam at the point where it enters the patient. Determining the radiation profile ensures that the beam width to which the patient is exposed is not significantly greater than the width that the detectors view.

(b) Computed tomography dose index (CTDI). CTDI is a measure of patient dose under specified scan conditions. This must be documented and compared to other units.

(3) *Image quality effects.*

(a) Noise. Noise effects the image contrast. Increased noise results in decreased low contrast resolution.

(b) Spatial uniformity. CT numbers across a uniform object should be the same for the system to accurately represent the patient information.

(c) Slice thickness/sensitivity profile. Sensitivity profile is the actual width of the imaged slice.

(d) Low contrast resolution versus surface dose. Generally, the higher the surface dose, the better the low contrast. However, the operator should strive to minimize the dose while maximizing the image contrast. There is a trade-off with low contrast and surface dose that the operator should evaluate on a case-by-case basis.

(e) High contrast resolution. High contrast resolution is the ability of the scanner to resolve small objects. This should be measured to ensure that it is capable of detecting objects of clinical interest.

CHAPTER 4

DESIGN REQUIREMENTS AND PERFORMANCE STANDARDS FOR X-RAY SYSTEMS AND FACILITIES

Section I. DIAGNOSTIC X-RAY SYSTEMS

4–1. Scope

a. This chapter provides design requirements and performance standards for diagnostic x-ray systems under DA jurisdiction. The standards in this chapter ensure compliance with 21 CFR, chapter 1, subchapter J. If the standards of 21 CFR are revised to be more restrictive, they will take precedence over the standards in this bulletin.

b. Diagnostic x-ray systems and components that are subject to the requirements of 21 CFR will comply with the standards in this chapter. All other x-ray systems and components should be calibrated to comply with these standards to the extent possible (see para 4-10).

4–2. General standards

The manufacturer will—

a. Affix a permanent label or tag on all new x-ray systems and components indicating that the system or component conforms to the requirements of 21 CFR, chapter 1, subchapter J.

b. Ensure that the following warning statement is displayed on the control panel containing the main power switch and is legible and accessible to view.

WARNING: This x-ray unit may be dangerous to patient and operator unless safe exposure factors and operating instructions are observed.

c. Permanently mark the cathode and anode receptacles of the x-ray tube and the location of the apparent focal spot.

d. Construct diagnostic source assemblies so that leakage radiation exposure at a distance of 1 m in any direction from the source will not exceed 100 mR (2.58×10^{-5} coulombs/kilogram (C/kg)) in 1 hour when the x-ray tube is operated at the leakage technique factors. If the tube housing assembly's maximum rated peak tube potential is greater than the diagnostic source assembly's maximum rated peak tube potential, provide positive means to limit the maximum x-ray tube potential to that of the diagnostic source assembly.

e. Construct components other than the diagnostic source assembly so that the radiation exposure will not exceed 2 mR (5.16×10^{-7} C/kg) in 1 hour at 5 cm from any accessible surface of the component when it is operated in an assembled x-ray system under any conditions for which it was designed.

f. Ensure that the HVL of the primary beam for a given x-ray tube potential is not less than the appropriate value shown in table 4-1, located at the end of this chapter.

(1) If it is necessary to determine the HVL at an x-ray tube potential that is not listed in the table, linear interpolation or extrapolation may be used.

(2) Provide positive means to ensure that at least the minimum filtration needed to achieve the above beam quality requirements is in the primary beam during each exposure. In the case of a system that is to be operated with more than one thickness of filtration, this requirement can be met by using a filter interlock with the tube potential selector to prevent x-ray emission if the minimum required filtration is not in place.

g. Except when used in a CT system, the aluminum equivalent of each of the items listed in table 4-2 (located at the end of this chapter), which are used between the patient and image receptor, may not exceed the indicated limits. Determine compliance by x-ray measurements made at a potential of 100 kVp and with a primary beam that has an HVL of 2.7 mm of aluminum. This requirement applies to front panel(s) of cassette holders and film changers provided by the manufacturer for patient support or for prevention of foreign object intrusions. It does not apply to screens and their associated mechanical support panels or to grids.

4–3. Radiographic systems

The provisions of this paragraph apply to all x-ray systems and components for the recording of images, including general purpose, mammographic, tomographic, spot-film, and dental systems. However, systems using imaging intensifiers and CT systems manufactured after 28 November 1984 are not subject to these provisions.

a. The technique factors to be used during an

exposure will be indicated before an exposure begins. If an automatic exposure control (AEC) is used, the technique factors that are set prior to the exposure will be indicated. For equipment with fixed technique factors, this requirement may be met by permanent markings. The indicated technique factors will be visible from the operator's location, except in the case of spot films made by a fluoroscopist.

b. Provide means to terminate the exposure after a preset time interval, a preset product of current and time, a preset number of pulses, or a preset radiation exposure to the image receptor. Except during serial radiography, the operator will be able to terminate the exposure at any time during an exposure of greater than 1/2 second. Termination of exposure will cause the timer to automatically reset to its initial setting or to zero. It will not be possible to make an exposure when the timer is set to zero or an off position, if either position is provided. During serial radiography, the operator will be able to terminate the exposures at any time, but the x-ray system may have a means to permit completion of any single exposure in the series.

c. For x-ray systems with AEC, indication will be made on the control panel when this mode of operation is selected. The following requirements will also be met:

(1) When the peak tube potential is 51 kVp or greater, the minimum exposure time for—

(a) Field emission equipment rated for pulsed operation will be less than or equal to the time interval equivalent to two pulses.

(b) All other equipment will be less than or equal to 1/60 second or the time interval required to deliver 5 mAs, whichever is greater.

(2) Either limit the product of peak tube potential, tube current, and exposure time to not more than 60 kilowatt-seconds per exposure or limit the product of tube current and exposure time to not more than 600 mAs per exposure. If the x-ray tube potential is less than 51 kVp, limit the product of x-ray tube current and exposure time to not more than 2,000 mAs per exposure.

(3) A visible signal will indicate when an exposure has been terminated at the limits described in (2) above. The operator will have to manually reset the AEC before further automatically timed exposures can be made.

d. The deviation of the tube potential, tube current, and exposure time from the indicated values will be within the tolerances given in the manufacturer's specifications. If the manufacturer's specifications are not available, the measured technique factors should not deviate from the indicated values by more than 3 percent and will not deviate from the indicated value by more than 5 percent.

e. When the equipment is operated on an adequate power supply per the manufacturer's specifications, the estimated coefficient of variation of radiation exposures will be no greater than 0.05 for any combination of selected technique factors. That is—

$$C = \frac{1}{\bar{X}} \left[\sum_{i=1}^{n} \frac{(X_i - \bar{X})^2}{n-1} \right]^{\frac{1}{2}}$$

where: X_i = the ith exposure measurement
$\bar{X}$ = the average of the exposure measurements
n = the number of measurements taken

f. When the equipment is operated on an adequate power supply per the manufacturer's specifications and at any fixed tube potential within the range of 40 percent to 100 percent of the maximum, the following requirements will be met.

(1) If the equipment has independent selection of x-ray tube current (mA) and exposure time(s), the average radiation output (mR/mAs) at any two consecutive tube current settings will not differ by more than 0.10 times their sum. That is—

$$|X_1 - X_2| \leq 0.10(X_1 + X_2)$$

where: X_1 and X_2 = the average radiation output values obtained at each of two consecutive tube current settings or at two settings differing by no more than a factor of 2 if the tube current selection is continuous.

(2) If the equipment has selection of tube current-exposure time product (mAs) only, the average radiation output (mR/mAs) at any two consecutive mAs selector settings will not differ by more than 0.10 times their sum. That is—

$$|X_1 - X_2| \leq 0.10(X_1 + X_2)$$

where: X_1 and X_2 = the average radiation output values obtained at each of two consecutive mAs selector settings or at two settings

differing by no more than a factor of 2 where the mAs selector provides continuous selection.

g. Unless spot-film devices are in service, general purpose x-ray systems (stationary, mobile, and portable) will have—

(1) A means for stepless adjustment of the size of the x-ray field. Each dimension of the minimum field size at an SID of 100 cm will be equal to or less than 5 cm.

(2) A means for visually defining the perimeter of the x-ray field.

(a) The total misalignment of the edges of the visually defined x-ray field with respective edges of the actual x-ray field along either the length or width of the visually defined field will not exceed 2 percent of the distance from the source to the center of the visually defined field when the surface upon which it appears is perpendicular to the axis of the primary beam.

(b) When a light localizer is used to define the x-ray field, it will provide an average illuminance of not less than 15 foot-candles (160 lux) at 100 cm or at the maximum SID, whichever is less. The average illuminance will be based upon measurements made in the approximate center of each quadrant of the light field. Radiation therapy simulation systems are exempt from this requirement.

(c) The edge of the light field at 100 cm or at the maximum SID, whichever is less, will have—

1. A contrast ratio (CR), corrected for ambient lighting, of not less than 4 in the case of beam-limiting devices designed for use on stationary equipment.

2. A CR of not less than 3 in the case of beam-limiting devices designed for use on mobile and portable equipment.

(d) The CR is defined as—

$$CR = I_1 / I_2$$

where: I_1 = the illuminance 3 mm from the edge of the light field toward the center of the field.

I_2 = the illuminance 3 mm from the edge of the light field away from the center of the field.

(e) Determine compliance with a measuring aperture of 1 mm.

h. Unless spot-film devices are in service, stationary general purpose x-ray systems will meet the following requirements, in addition to those of *g* above.

(1) Means will be provided to—

(a) Indicate when the axis of the primary beam is perpendicular to the plane of the image receptor.

(b) Align the center of the x-ray field with respect to the center of the image receptor to within 2 percent of the SID.

(c) Indicate the SID to within 2 percent.

(2) The beam-limiting device will numerically indicate the field size in the plane of the image receptor to which it is adjusted.

(3) Field sizes and SIDs will be specified in inches, centimeters, or both. Aperture adjustments will result in x-ray field dimensions in the plane of the image receptor which correspond to those indicated by the beam-limiting device to within 2 percent of the SID when the beam axis is indicated to be perpendicular to the plane of the image receptor.

i. Radiographic systems designed only for mammography will be provided with means to limit the primary beam such that the x-ray field at the plane of the image receptor does not extend beyond any edge of the image receptor at any designated SID except the edge of the image receptor designed to be adjacent to the chest wall where the x-ray field may not extend beyond the edge by more than 2 percent of the SID. This requirement can be met with a system that performs as prescribed in *l* below.

(1) When the beam-limiting device and image receptor support device are designed to be used to immobilize the breast during a mammographic procedure and the SID may vary, the SID indication specified in *l* (2) and *l* (3) below will be the maximum SID for which the beam-limiting device or aperture is designed.

(2) Each image receptor support intended for installation on a system designed only for mammography will have clear and permanent markings to indicate the maximum image receptor size for which it is designed.

j. Radiographic systems designed for only one image receptor size at a fixed SID will have either of the following—

(1) A means to—

(a) Limit the x-ray field at the plane of the image receptor to dimensions no greater than those of the image receptor.

(b) Align the center of the x-ray field with the center of the image receptor to within 2 percent of the SID.

(2) A means to both size and align the x-ray field such that the x-ray field at the plane of the image receptor does not extend beyond any edge of the image receptor.

k. Radiographic systems not specifically covered in *g, h, i,* and *j* above or *m* below and systems covered in *n* below, which are also designed for use with extraoral image receptors, and when used with an extraoral image receptor, will have—

(1) A means to limit the x-ray field in the plane of the image receptor so that the field does not exceed each dimension of the image receptor by more than 2 percent of the SID, when the axis of the primary beam to perpendicular to the plane of the image receptor and a means to align the center of the x-ray field with the center of the image receptor to within 2 percent of the SID.

(2) A means to both size and align the x-ray field such that the field at the plane of the image receptor does not extend beyond any edge of the image receptor.

l. The requirements of *j* above and *m* below may be met with either—

(1) A system that performs per *g* and *h* above.

(2) An assortment of removable, fixed-aperture, beam-limiting devices sufficient to meet the requirement for each combination of image receptor size and SID for which the unit is designed if alignment means are also provided and each such device has a clear and permanent marking to indicate the image receptor size and SID for which it is designed.

(3) A beam-limiting device having multiple fixed apertures sufficient to meet the requirement for each combination of image receptor size and SID for which the unit is designed if permanent, clearly legible markings indicate the image receptor size and SID for which each aperture is designed and the aperture that is in position for use.

m. For spot-film devices other than those provided for use with a radiation therapy simulation system—

(1) The spot-film devices will have a means between the source and the patient for adjustment of the x-ray field size in the plane of the image receptor to the size of that portion of the image receptor that has been selected on the spot-film selector. The x-ray field size will adjust automatically when the x-ray field size in the plane of the image receptor is greater than the selected portion of the image receptor. If the x-ray field size is less than the size of the selected portion of the image receptor, the field size will not open automatically to the size of the selected portion of the image receptor unless the operator has selected that mode of operation.

(2) Neither the length nor the width of the x-ray field in the plane of the image receptor will differ from the corresponding dimensions of the selected portion of the image receptor by more than 3 percent of the SID when adjusted for full coverage of the selected portion of the image receptor. The sum, without regard to sign, of the length and width differences will not exceed 4 percent of the SID. If the angle between the plane of the image receptor and beam axis is variable, spot-film devices manufactured after 25 February 1978 will have a means to indicate when the axis of the primary beam is perpendicular to the plane of the image receptor. Compliance will be determined with the beam axis indicated to be perpendicular to the plane of the image receptor.

(3) The center of the x-ray field in the plane of the image receptor will be aligned with the center of the selected portion of the image receptor to within 2 percent of the SID.

(4) The spot-film devices will have a means to reduce the x-ray field size in the plane of the image receptor to a size smaller than the selected portion of the image receptor, such that—

(a) When used on fluoroscopic systems with a fixed SID, which are not required to and do not provide stepless adjustment of the x-ray field, the minimum field size does not exceed 125 square centimeters (cm^2).

(b) When used on fluoroscopic systems with a variable SID or stepless adjustment of the field size, the minimum field size, at the greatest SID, will be containable in a square of 5 cm by 5 cm.

(5) A capability may be provided for overriding the automatic x-ray field size adjustment in case of system failure. If it is provided, a signal visible at the fluoroscopist's position will indicate whenever the automatic x-ray field size adjustment override is engaged. Each such system failure override switch will be clearly labeled as follows:

<u>For X-ray Field Limitation System Failure</u>

n. Radiographic equipment designed for use with an intraoral image receptor shall have the means to limit the primary beam, such that—

(1) If the minimum SSD is 18 cm or more, the x-ray field at the minimum SSD will be containable in a circle having a diameter of no more than 7 cm.

(2) If the minimum SSD is less than 18 cm, the x-ray field at the minimum SSD will be containable in a circle having a diameter of no more than 6 cm.

o. A positive beam limitation (PBL) system, when provided, will—

(1) Prevent x-ray production when—

(a) Either the length or width of the x-ray field in the plane of the image receptor differs from the corresponding image receptor dimension by more than 3 percent of the SID or the sum of the length and width differences, without regard to sign, exceeds 4 percent of the SID.

(b) The beam-limiting device is at a SID for which PBL is not designed for sizing.

(2) Function as described in (1) above whenever all the following conditions are met.

(a) An image receptor is inserted into a permanently mounted cassette holder.

(b) The image receptor length and width are less than 50 cm.

(c) The primary beam axis is either within ±3 degrees of vertical and the SID is between 90 cm to 130 cm, inclusive, or within ±3 degrees of horizontal and the SID is between 90 cm to 205 cm, inclusive.

(d) The primary beam axis is perpendicular to the plane of the image receptor to within ±3 degrees.

(e) Neither tomographic nor stereoscopic radiography is being performed.

(3) Be capable of operation such that, at the discretion of the operator, the size of the field may be made smaller than the size of the image receptor through stepless adjustment of the field size. Each dimension of the minimum field size at a SID of 100 cm will be equal to or less than 5 cm. Return to PBL function, as described in (1) above, will occur automatically upon any change of image receptor size or SID.

p. A capability may be provided for overriding the PBL in case of system failure and for servicing the system. This override may be for all SIDs and image receptor sizes. A key will be required for any override capability that is accessible to the operator (override capability is considered accessible to the operator if it is referenced in the operator's manual or in other material intended for the operator or if its location is such that the operator would consider it part of the operational controls). It will not be possible to remove the key while the PBL is overridden. Each such key switch or key will be clearly and durably labeled as follows:

For X-ray Field Limitation System Failure

q. X-ray systems designed for use with an intraoral image receptor will have the means to limit the SSD to—

(1) Not less than 18 cm if operable above 50 kVp.

(2) Not less than 10 cm if not operable above 50 kVp.

r. Mobile and portable x-ray systems, other than dental, will have the means to limit the SSD to not less than 30 cm.

s. The x-ray control will provide visual indication whenever x-rays are produced. In addition, a signal audible to the operator will indicate that the exposure has terminated.

t. Where two or more radiographic tubes are controlled by one exposure switch, the selected tube (s) will be clearly indicated before initiation of the exposure. This indication will be on both the x-ray control and at or near the selected tube housing assembly.

u. Radiation emitted from the x-ray tube of capacitor energy storage equipment will—

(1) Not exceed 0.03 mR (8.6 x 10^{-9} C/kg) in 1 minute at 5 cm from any accessible surface of the diagnostic source assembly with the beam-limiting device fully open; the system fully charged; and the exposure switch, timer, or any discharge mechanism not activated. Determine compliance by averaging the measurements over an area of 100 cm^2 with no linear dimension greater than 20 cm.

(2) Not exceed 100 mR (2.58 x 10^{-5} C/kg) in 1 hour at 100 cm from the x-ray source with the beam-limiting device fully open, when the system is discharged through the x-ray tube either manually or automatically by use of a discharge switch or deactivation of the input power. Determine compliance by measuring the maximum exposure per discharge and multiplying by the total number of discharges in 1 hour (duty cycle). Average the measurements over an area of 100 cm^2 with no linear dimension greater than 20 cm.

v. For x-ray systems manufactured after 5 September 1978, which are designed only for mammography, the transmission of the primary beam through any image receptor support provided with the system will be limited such that the exposure 5 cm from any accessible surface beyond the plane of the image receptor supporting device does not exceed 0.1 mR (2.58 x 10^{-8} C/kg) for each activation of the tube.

(1) Measure exposure with the system operated at the minimum SID for which it is designed.

(2) Determine compliance—

(a) At the maximum rated peak tube potential for the system.

(b) At the maximum rated product of the tube current and exposure time (mAs) for that peak tube potential.

(c) By averaging the measurements over area of 16 in^2 (100 cm^2) with no linear dimension greater than 20 cm.

w. The exposure switch will be—

(1) A continuous pressure "dead-man" type switch.

(2) Located in such a manner as to prevent convenient use by the operator outside the protective enclosure (control booth).

x. Mechanical support of the tube head and beam-limiting device will maintain its proper exposure position without drift, sag, or vibration.

y. Telemetric exposure switches controlling the tube circuit by wireless means will be used with caution. When using two or more telemetric timers within the same facility—

(1) Operate all timers on different frequencies.

(2) Label or control each telemetric switch to assure that they do not become interchanged.

4–4. Mobile radiographic x-ray systems

In addition to the requirements in paragraph 4-3, mobile and portable x-ray systems will comply with the following:

a. Arrange the exposure switch so that the operator can stand at least 2 m from the x-ray tube, the primary beam, and the patient.

b. Visual means will be provided on the x-ray control panel of the battery powered systems to indicate if the battery is charged and is adequate for proper operation. It will not be possible to produce x-rays unless there is an adequate charge for proper operation.

c. An enabling key will be required to activate the system. To prevent unauthorized use, remove the key during system storage, except during battery recharging.

d. Provide positive means to ensure that the minimum SSD is no less than 30 cm.

4–5. Mammographic x-ray systems

In addition to the requirements of paragraph 4-3, mammographic x-ray systems will comply with the following:

a. Radiographic x-ray systems designed for conventional radiographic procedures that have been modified or equipped with special attachments for mammography will not be used for mammography. Radiographic equipment used for mammography will—

(1) Be specifically designed for mammography.

(2) Be certified x-ray systems per 21 CFR 1010.2.

(3) Incorporate a breast compression device.

(4) Have the provision for operating with a removable grid (except for xeromammographic systems).

b. During a single cranio-caudal view of an accepted phantom simulating a 4.5 cm thick, compressed breast consisting of 50 percent glandular and 50 percent adipose tissue, the average glandular dose delivered will—

(1) Not exceed 0.3 rad (3.0 milliGray (mGy)) per exposure for screen-film mammography procedures.

(2) Not exceed 0.4 rad (4 mGy) per exposure for xeromammography procedures.

c. At least annually, measure the dose under the technique factors and conditions that are used to produce the phantom images submitted for accreditation.

d. All dual filter mammographic systems will have—

(1) A filter interlock system in the tube housing.

(2) An indication on the control panel that clearly indicates the position of the filter.

4–6. Tomographic x-ray systems

In addition to the requirements of paragraph 4-3, tomographic x-ray systems will comply with the following:

a. The error in the cut level indication will not exceed the manufacturer's specifications or, in the absence of such specifications, will not exceed 5 mm.

b. The difference between the indicated tomographic angle and the measured angle will not exceed the manufacturer's specifications or, in the absence of such specifications, will not exceed 5 degrees. The symmetry of the exposure angle about the midline will not exceed the manufacturer's specifications or, in the absence of such specifications will not exceed 2 degrees, unless the system is designed to operate in an asymmetrical manner. Since the cut thickness is dependent on exposure angle, the thickness of the cut plane should decrease as the exposure angle increases.

c. The tomographic plane should be flat to within manufacturer's specifications or, in the absence of such specifications, 3 mm for linear systems and 2 mm for other systems.

d. Tomographic x-ray systems will produce a uniform density along the beam path when an image of a tomographic uniformity test phantom is produced. Linear tomographic images should consist of an evenly darkened straight line without evidence of mechanical or radiation caused irregularities. Tomographic x-ray systems with circular, elliptical, hypocycloidal, or trispiral scan capability will produce an evenly darkened closed path. The path overlap will not exceed the manufacturer's specifications or, in the absence of such specifications, will not exceed 20 degrees.

e. All tomographic systems will be capable of resolving a mesh pattern with 30 hole per inch (30 mesh) over the entire length in the plane of the cut. Specialized equipment should be capable of resolving a 50 mesh pattern.

4-7. Fluoroscopic x-ray systems

a. The fluoroscopic imaging assembly will have a primary protective barrier which intercepts the entire cross section of the primary beam at any

SID. The x-ray tube used for fluoroscopy will not produce x-rays unless the barrier is in position to intercept the entire primary beam. The exposure rate due to transmission through the barrier with the attenuation block in the primary beam combined with radiation from the image intensifier if provided, will not exceed 3.34 x 10^{-3} percent of the EER, at a distance of 10 cm from any accessible surface of the fluoroscopic imaging assembly beyond the plane of the image receptor.

b. Radiation therapy simulation systems are exempt from the above requirement provided—

(1) The systems are intended only for remote control operation.

(2) The manufacturer provides instructions to—

(a) Assemblers concerning the control location.

(b) Users concerning the importance of remote control operation.

c. The following field limitations apply to fluoroscopic x-ray systems.

(1) The x-ray field produced by nonimage-intensified fluoroscopic equipment will not extend beyond the entire visible area of the image receptor. The equipment will have a means for stepless adjustment of the field size. The minimum field size, at the greatest SID, will be containable in a square of 5 cm by 5 cm.

(2) For image-intensified fluoroscopic equipment other than radiation therapy simulation systems, neither the length nor the width of the x-ray field in the plane of the image receptor will exceed that of the visible area of the image receptor by more than 3 percent of the SID. The sum of the excess length and the excess width will be no greater than 4 percent of the SID.

(3) If the angle between the image receptor and the axis of the primary beam is variable, the equipment will have a means to indicate when the axis of the primary beam is perpendicular to the plane of the image receptor.

(4) Beam-limiting devices incorporated in equipment with a variable SID or the capability of a visible area of greater than 47 in^2 (300 cm^2) will have a means for stepless adjustment of the x-ray field. Equipment with a fixed SID and the capability of a visible area of no greater than 47 in^2 (300 cm^2) will have either a stepless adjustment of the x-ray field or a means to further limit the x-ray field size at the plane of the image receptor to 19 in^2 (125 cm^2) or less. Stepless adjustment will, at the greatest SID, provide continuous field sizes from the maximum obtainable to a field size containable in a square of 5 cm by 5 cm.

(5) If the fluoroscopic x-ray field size is adjusted automatically as the SID or image receptor size is changed, a capability may be provided for overriding the automatic adjustment in case of system failure. If it is so provided, a signal visible at the fluoroscopist's position will indicate whenever the automatic field adjustment is overridden. Each such system failure override switch will be clearly labeled as follows:

For X-ray Field Limitation System Failure

d. X-ray production in the fluoroscopic mode will be controlled by a device that requires continuous pressure by the operator for the entire time of any exposure. When recording serial fluoroscopic images, the operator will be able to terminate the x-ray exposures at any time, but means may be provided to permit completion of any single exposure of the series in process.

e. The following EERs apply to fluoroscopic x-ray systems.

(1) Fluoroscopic equipment that is provided with automatic exposure rate control (AERC) will not be operable at any combination of tube potential and current that will result in an exposure rate in excess of 10 roentgens per minute (R/min) (2.58 x 10^{-3} C/kg · min) at the point where the center of the primary beam enters the patient, except during recording of fluoroscopic images or when an optional high-level control (HLC) is provided.

(2) Fluoroscopic equipment that is not provided with AERC will not be operable at any combination of tube potential and current that will result in an exposure rate in excess of 5 R/min (1.29 x 10^{-3} C/kg · min) at the point where the center of the primary beam enters the patient, except during recording of fluoroscopic images or when an optional HLC is provided.

(3) Equipment with both an AERC mode and a manual mode will not be operable at any combination of tube potential and current that will result in an exposure rate in excess of 10 R/min (2.58 x 10^{-3} C/kg · min) in either mode at the point where the center of the primary beam enters the patient, except during recording of fluoroscopic images or when an optional HLC is provided.

(4) If HLC is provided, the system will not be operable, in either AERC or manual mode, at any combination of tube potential and current that will result in an exposure rate in excess of 5 R/min (1.29 x 10^{-3} C/kg · min) at the point where the center of the primary beam enters the patient, unless the HLC is activated. The system will have a special means to activate the HLC. The HLC will be operable only when the operator provides continuous manual activation. A continuous signal audible to the fluoroscopist will indicate that the HLC is activated.

(5) Fluoroscopic equipment manufactured on and after 19 May 1995 will be equipped with AERC if operable at any combination of tube potential and current that results in an exposure rate greater than 5 R/min (1.29 x 10^{-3} C/kg · min) at the point where the center of the primary beam enters the patient. Provision for manual selection of technique factors may be provided.

(a) This equipment will not be operable at any combination of tube potential and current that will result in an exposure rate in excess of 10 R/min (2.58 x 10^{-3} C/kg · min) at the point where the center of the primary beam enters the patient, except during the recording of images from an x-ray image-intensifier tube using photographic film or a video camera when the x-ray source is operated in a pulsed mode or when an optional HLC is activated. Special means will be required to activate the HLC.

(b) When the HLC is activated, the equipment will not be operable at any combination of tube potential and current that will result in an exposure rate in excess of 20 R/min (5.16 x 10^{-3} C/kg · min) at the point where the center of the primary beam enters the patient.

(c) The HLC will be operable only when the operator provides continuous manual activation. A continuous signal audible to the fluoroscopist will indicate that the HLC is activated.

(6) Fluoroscopic radiation therapy simulation systems are exempt from the requirements set forth in (1) through (5) above concerning EERs.

f. During fluoroscopy and cinefluorography, x-ray tube potential and current will be continuously indicated. Deviation of x-ray tube potential and current from the indicated values will not exceed the maximum deviation stated by the manufacturer.

g. The equipment will have the means to limit the SSD to not less than 38 cm on stationary fluoroscopic systems and to not less than 30 cm on mobile and portable fluoroscopic systems. In addition, for image-intensified systems intended for specific surgical application that would be prohibited at the SSDs specified in this paragraph, provisions may be made for operation at shorter SSDs, but in no case less than 20 cm. When provided, the manufacturer must set forth precautions with respect to the optional means of spacing.

h. The equipment will have the means to preset the cumulative on-time of the fluoroscopic tube. The timing device's maximum cumulative time will not exceed 5 minutes without resetting. A signal, audible to the fluoroscopist, will indicate the completion of any preset cumulative on-time. While x-rays are being produced, this signal will continue to sound until the timing device is reset. Radiation therapy simulation systems may alternatively have a timer that—

(1) Indicates the total cumulative exposure time during which x-rays were produced.

(2) Is capable of being reset between x-ray examinations.

i. In addition to the above requirements, mobile and portable fluoroscopic systems will have image intensifiers.

j. Fluoroscopic x-ray systems will have a diagnostic-type protective source assembly. The apparent focal spot will be clearly indicated on the tube housing. The cathode and anode cable receptacles of the x-ray tube will be permanently identified.

k. Fluoroscopic systems with the x-ray tube permanently located under a table will have a shielding device of at least one-tenth value layer of material at the maximum tube potential for covering the bucky slot during fluoroscopy. If a shielded bucky slot cover is required to meet the exposure rate requirements of paragraph 4-2*e*, the operator should use positive means to ensure that the cover is in place before producing x-rays.

l. Under table fluoroscopic equipment will have a shielding device(s) of at least 0.25 mm lead equivalent at 100 kVp. Such devices include—

(1) Overlapping protective drapes hung from the image receptor.

(2) Hinged or sliding panels at the front of the table. When provided, a hinged or sliding panel should project at least 13 cm above the tabletop and will not interfere with the use of the table.

m. Each high-voltage generator assembly will have a pair of shockproof cable receptacles, per Federal Standard No. 72, for each x-ray tube assembly that the high-voltage generator is to energize. The high-voltage generator will be permanently marked "Equipped with Federal Standard Shockproof Cable Receptacles." The receptacles will be covered when not in use.

4–8. Cardiac x-ray systems

a. Cardiac x-ray systems with a tube current of 600 mA or greater that are placed in service after 1985 will have an anode heat calculator device or system. For x-ray systems installed prior to 1985, the use of a heat calculator may be beneficial, but it may not be available from the manufacturer. For such systems, the heat calculator is not required.

b. Each cardiac x-ray system will have a tube protective circuit.

c. A line voltage compensating device (operable from the x-ray control panel without the aid of tools), together with a meter for determining the proper adjustment of the device, will be mounted in all cardiac x-ray control panels not having auto-

matic voltage compensation or a prereading kVp meter that responds directly to line voltage variations.

4–9. Computed tomography

a. CT condition of operation.

(1) The CT conditions of operation to be used during a scan or a scan sequence will be indicated prior to initiation of a scan or a scan sequence. On equipment having all or some of these conditions of operation at fixed values, this requirement may be met by permanent markings. Indication of the CT conditions of operation will be visible from any position from which scan initiation is possible.

(2) The equipment will have the means—

(a) To terminate the x-ray exposure automatically by either de-energizing the x-ray source or shuttering the primary beam in the event of equipment failure affecting data collection. Such termination will occur within an interval that limits the total scan time to no more than 110 percent of its preset value through the use of either a backup timer or devices that monitor equipment function. A visible signal will indicate when the x-ray exposure has been terminated through these means, and the operator will have to manually reset the CT conditions of operation prior to the initiation of another scan.

(b) For the operator to terminate the x-ray exposure at any time during a scan, or series of scans under x-ray system control, of greater than 1/2 second duration. Termination of the x-ray exposure will require the operator to reset the CT conditions of operation prior to the initiation of another scan.

b. Localization of the tomographic plane.

(1) A single tomogram system will have the means to visually determine the tomographic plane or a reference plane offset from the tomographic plane.

(2) A multiple tomogram system will have the means to permit visual determination of the location of a reference plane. The manufacturer will provide, to the user, the relationship of the reference plane to the planes of the tomogram. This reference plane may be offset from the location of the tomographic planes.

(3) The distance between the indicated location of the tomographic plane or reference plane and its actual location may not exceed 5 mm.

(4) For an offset alignment system, the manufacturer shall provide specific instructions with respect to the use of this system for patient positioning.

(5) If a mechanism using a light source is used to satisfy the requirements of (1) through (3) above, the light source will allow visual determination of the location of the tomographic plane or reference plane under ambient light conditions of up to 47 foot-candles (500 lux).

(6) The deviation of indicated scan increment from actual scan increment may not exceed 1 mm.

c. Beam-on and shutter status indicators.

(1) The equipment will have a visual indicator on the control and on or near the housing of the scanning mechanism to provide visual indication when, and only when, x-rays are being produced and, if applicable, whether the shutter is open or closed. If the x-ray production period is less than 1/2 second, the indication of x-ray production will be actuated for 1/2 second. Indicators at or near the housing of the scanning mechanism will be discernible from any point external to the patient opening where insertion of any part of the human body into the primary beam is possible.

(2) For systems that allow high voltage to be applied to the x-ray tube continuously and that control the emission of x-rays with a shutter, the radiation emitted may not exceed 100 mR (2.58×10^{-5} C/kg) in 1 hour at any point 5 cm outside the external surface of the scanning mechanism's housing when the shutter is closed. Determine compliance by averaging measurements over an area of 100 cm^2 with no linear dimensions greater than 20 cm.

d. CT image analysis. The manufacturer will provide a method with specific use instructions to calculate the mean and standard deviation of CT numbers for an array of picture elements about any location in the image. The number of elements in this array will be under user control.

4–10. Other radiographic x-ray systems

a. Certified. The design requirements and performance standards given in this chapter apply to all certified diagnostic x-ray systems, including special purpose x-ray systems, unless the system has been granted a variance under the provisions of 21 CFR 1010.4.

b. Uncertified. To the extent possible, uncertified x-ray systems, including veterinary x-ray systems, should be designed and calibrated to meet the standards specified in this chapter for certified x-ray systems. Uncertified x-ray systems that cannot be calibrated to meet these standards should be removed from use for human patients as soon as practicable.

Section II. DESIGN OR MODIFICATION OF DIAGNOSTIC X-RAY FACILITIES

4–11. Scope

This section provides requirements for the design or modification and plan reviews of radiologic facilities worldwide under DA jurisdiction. TM 5-805-12; MIL-HDBK 1191; CEGS-13090; and the Architectural and Engineering Instructions, Medical Design Standards contain general guidance for the construction of fixed diagnostic x-ray facilities.

4–12. Evaluation of design plans

a. Before modification or construction begins, a qualified expert will—

(1) Review all architectural design or modification plans as well as all design or construction specifications for fixed radiologic facilities. The following will perform these reviews:

(a) A health physicist at the RMC or the USACHPPM.

(b) A military, civilian, or contract health physicist or medical physicist approved by a health physicist at the RMC or the USACHPPM.

(2) Ensure that the design is adequate to meet regulatory dose limits and keep doses to personnel ALARA.

b. At a minimum, submit the following information to the reviewing physicist.

(1) To scale drawings (preferably the architectural blueprints) showing the locations of doors, windows, and other openings in the walls.

(2) Information concerning use and occupancy of the areas adjacent to the x-ray room to include the areas above and below the x-ray room. The information should also state whether the adjacent areas will be considered controlled (for purposes of radiation protection) or uncontrolled areas.

(3) The composition and thickness of proposed or existing barriers (floors, ceilings, walls, doors, and windows) and their lead equivalence, if known.

(4) The thickness and height of the lead to be installed in barriers.

(5) Which barriers are to be leaded.

(6) The locations and orientation of the x-ray table, diagnostic source assembly, and image receptor to include wall cassette holders, if used, as well as distances from diagnostic source assembly to occupied area(s).

(7) The location and construction of the protective enclosure (control booth) to include the dimension of the observation window, its height, and placement in relation to the edge of the protective barrier.

(8) The orientation of the x-ray control panel in relation to the observation window.

(9) The maximum kVp, mA, estimated weekly workload (mA-min/week), and calculations made to determine workload.

(10) The proposed location of mechanical or electrical door locks or interlocks if used for radiation protection.

4–13. Design of diagnostic x-ray rooms

a. Locate the x-ray control panel for a fixed radiographic x-ray system behind a fixed protective barrier (control booth) or in a separate room. The control should be designed so that the primary radiation must scatter twice before reaching the operator.

(1) When a door forms part of the shielding for the operator, it will be—

(a) Of the same lead equivalent thickness as the barrier in which it is located.

(b) Equipped with electrical interlocks to prevent production of x-rays when the door is open.

(2) Ensure that the control booth is designed so that the operator can observe and communicate with the patient in all diagnostic areas within the x-ray room.

(3) Install the control switch in a location that allows the operator to initiate an exposure only from behind the protective barrier.

(4) For controls located outside of exam rooms (for example, endodontic systems), install an enabling key to prevent inadvertent exposures and the initiation of exposures by unauthorized individuals.

(5) Ensure that the observation window is of the same lead equivalent thickness as the protective barrier in which it is located. It will be at least 25 by 30 cm and should be at least 41 by 61 cm. If the orientation of the protective enclosure's observation window prevents direct observation of the patient, then use alternate means such as a convex mirror or television.

(6) Ensure that the protective enclosure is large enough to accommodate the x-ray control panel, unexposed x-ray film, and the operator. Normally 2.3 square meters (m^2) is adequate for fixed x-ray facilities.

(7) Locate the x-ray control panel so that the x-ray technologist has a suitable observation area in front of the observation window.

(8) Ensure that the edge of the protective barrier (control booth) is at least 46 cm from the nearest edge of the observation window, as measured

along the inside of the protective barrier (wall).

b. For equipment that has an integral radiation shield, such as those used on mammographic equipment, locate the exposure switch so that the operator receives maximum protection by the protective barrier.

c. When practical, locate doors to the x-ray room so that the x-ray technologist has direct control of access to the room.

d. Consider all walls, doors, floors, and ceilings that are exposed to the primary beam as primary barriers. Any additional lead shielding added to the barrier will extend to a minimum height of 2.1 m above the floor. The location of the room, the amount of shielding in the ceiling, and the occupancy or use of the rooms located above the x-ray room may require either the lead shielding to extend beyond 2.1 m or additional shielding in the ceiling, or both.

e. Ensure fluoroscopic rooms have general room illumination through diffusing panels and a dimmer switch to control the lights from within the room.

f. Ensure film processing areas comply with the requirements of MIL-HDBK 1191.

4–14. Evaluation of protective barriers

a. When performing radiation exposure evaluations to determine the adequacy of—

(1) Secondary protective barriers for x-ray or LINAC equipment, make the evaluations under the following conditions:

(a) With a phantom intercepting the primary beam.

(b) With the largest field size and radiation output at which the equipment can operate.

(c) With the angle that will provide the greatest amount of scatter radiation at the point of interest.

(2) Primary protective barriers, make the evaluations without a phantom.

b. When evaluating the results of the radiation protection survey for scatter radiation measurements—

(1) Consider actual operating conditions including workload, use factor, occupancy factor, and attenuation of the primary beam by the patient and objects permanently in the primary beam.

(2) Do not consider patient attenuation for primary beam radiation measurements.

4–15. Therapeutic x-ray and LINAC facility design requirements

a. Entrances to therapy rooms will be provided with a door of the same concrete equivalence as the adjacent walls or with some other physical barrier (door, gate, etc.) at the entrance to a radiation protective maze or labyrinth.

b. Install flashing or rotating lights at the entrance to any "High Radiation Area" or "Very High Radiation Area." These lights will operate automatically when radiation is being produced.

c. Install fail-safe interlocks on therapy systems capable of operating at peak tube potentials above 150 kVp. These interlocks will prevent the production of radiation when any door or barrier is open, and will terminate production of radiation if the door or barrier is opened after initiation of an exposure. Reinitiation of radiation production will not be possible except from the control panel after closing the door or barrier.

d. Provide a means for the therapist to observe and communicate with the patient from the control panel. When the observation is by electrical means, provide an alternate system.

e. If using light localization of treatment portals, provide a means to control the treatment room light intensity from within the room.

f. If the treatment room contains a therapy system capable of operating at energies above 500 kiloelectron volts, locate "panic" or "cut-off" buttons in accessible locations around the room. These buttons will be clearly labeled and will terminate the production of radiation when pressed.

g. In each LINAC room, install an area radiation monitor capable of measuring exposure rates from 0.002 to 10 rad/hr (0.02 to 100 mGy). Equip the monitor with a visual or audible alarm, or both, that can be seen or heard at the control panel.

4–16. Other x-ray facilities

Facilities designed for veterinary use and medical research will conform to the same shielding requirements as corresponding medical facilities.

4–17. Posting requirements

a. The RPO will post—

(1) "Radiation Area" or "Caution: X-Rays" signs in areas accessible to individuals where a person could receive a dose equivalent in excess of 0.005 rem (0.05 millisieverts) in any 1 hour at 30 cm from the radiation source.

(2) "High Radiation Area" signs in areas accessible to individuals where a person could receive a dose equivalent in excess of 0.1 rem (1 millisieverts) in any 1 hour at 30 cm from the radiation source.

(3) "Very High Radiation Area" signs in areas accessible to individuals where a person could receive an absorbed dose in excess of 500 rads (5 Gy)

in any 1 hour at 1 meter from the radiation source.

b. Exceptions to the posting of the "Radiation Area" or "Caution: X-Rays" signs in locations visible to patients may be granted by the RPO if such signs may be a source of apprehension, provided personnel occupying the areas are otherwise informed of the radiation levels to which they may be exposed and entrance to the area is strictly controlled. Exceptions may not be granted for "High Radiation Areas" or "Very High Radiation Areas."

Table 4–1. Minimum HVLs

Tube potential (kVp)		Minimum HVL (mm of Al)			Required minimum filtration	
Designed operating range	Measured operating potential	Intraoral dental systems	Other x-ray systems (1 phase)	Other x-ray systems (3 phase)	mm of Mo (for Mo targets)	mm of Al
50 and under	30	1.5	0.3	0.4	0.03	0.5
	40	1.5	0.4	0.5		
	50	1.5	0.5	0.6		
51 to 70	51	1.5	1.2	1.5		1.5
	60	1.5	1.3	1.8		
	70	1.5	1.5	2.0		
71 and over	71	2.1	2.1	2.1		2.5
	80	2.3	2.3	2.5		
	90	2.5	2.5	3.1		
	100	2.7	2.7	3.4		
	110	3.0	3.0	3.6		
	120	3.2	3.2	3.9		
	130	3.5	3.5	4.2		
	140	3.8	3.8	4.5		
	150	4.1	4.1	4.8		

Legend: Al = aluminum; Mo = molybdenum

Table 4–2. Aluminum equivalent of material between patient and image receptor

Item	Aluminum equivalent (mm)
Front panel (s) of cassette holder (total of all)	1.0
Front panel (s) of film changer (total of all)	1.0
Cradle	2.0
Tabletop, stationary, without articulated joint (s)	1.0
Tabletop, movable, without articulated joint (s) (including stationary subtop)	1.5
Tabletop with radiolucent panel having one articulated joint	1.5
Tabletop with radiolucent panel having two or more articulated joints	2.0
Tabletop, cantilevered	2.0
Tabletop, radiation therapy simulator	5.0

CHAPTER 5

SURVEYS OF DIAGNOSTIC X-RAY SYSTEMS

Section I. INTRODUCTION

5–1. Scope

a. This chapter provides minimum requirements for a program for surveying diagnostic x-ray systems. These surveys ensure that the x-ray systems are operating according to Federal regulations and national consensus standards related to radiation protection and image quality.

b. The surveys described in this chapter will be performed by or under the supervision of a qualified expert. MER personnel and or health physics technicians commonly perform many of the required tests; however, a qualified expert should review the results of these tests and perform any additional tests that are required by this chapter or that are necessary in his or her professional judgment.

c. Detailed procedures for conducting the tests required by this chapter are published in the Diagnostic X-ray Survey Procedure Manual, which can be requested from Commander, USACHPPM, ATTN: MCHB-TS-OMH, 5158 Blackhawk Road, APG, MD 21010-5403. Similar procedures can be found in NCRP Report No. 99 and AAPM Reports No. 4, 25, 31, and 39.

5–2. Quality assurance programs

a. A complete QAP at a medical or dental treatment facility is an ongoing process to—

(1) Monitor and objectively and systematically evaluate the access to and the quality and appropriateness of patient care.

(2) Identify problems in care and performance.

(3) Implement solutions to the problems in (2) above.

b. One aspect of the total QAP is monitoring image quality.

(1) The primary goal of an image quality control program (IQCP) is to ensure that radiographic examinations produce high quality images that provide the physician with the information needed to make an accurate and timely diagnosis.

(2) The secondary goal is to accomplish this with acceptable radiation exposure, risk, and discomfort to the patient and with minimum radiation exposure to health care personnel.

(3) To accomplish these goals, a program of periodic surveys of the x-ray systems and associated facilities and protective equipment must be established. The minimum requirements for this program are outlined in section II below.

c. It is not uncommon for invasive and noninvasive measurement techniques to give slightly different results for measurements of the same parameter (especially in the case of kVp). In this case, use the invasive measurement result to verify compliance with the standards in this bulletin. The noninvasive measurement result can be used as a constancy check. For example, if invasive measurement of the kVp gives a result of 80 kVp and noninvasive measurement gives a result of 78 kVp, then 80 kVp will be the value used to show regulatory compliance. However, subsequent noninvasive measurement can be made to show that the system is performing consistently (that is, still gives a result of 78 kVp).

Section II. X-RAY SURVEYS

5–3. General

A program for surveys of x-ray systems will be established by each facility that uses diagnostic or medical research x-ray systems. As a minimum the program will include the following.

a. Prior to initial use with human patients, an acceptance survey will be performed. The acceptance survey includes tests of electrical, mechanical, and, in some cases, image quality and radiation dose tests or measurements. It also includes verification of the adequacy of radiation protection equipment and facilities. The acceptance survey is a coordinated effort between the MER personnel and the health/medical physicist.

b. Exceptions to the above requirement may be granted by the supporting RMC for radiographic (other than mammographic) and fluoroscopic x-ray systems if—

(1) The x-ray system is being installed in an

existing x-ray room that previously contained a similar x-ray system.

(2) The supporting MER personnel have performed their portion of the acceptance test per the DOD Acceptance Procedures for X-Ray Equipment.

(3) The radiation protection survey has been requested from the supporting RMC but cannot be performed at the same time as the medical maintenance survey.

(4) Prior to granting an exception, the supporting RMC should request support from the USACHPPM if they are not able to provide this service. If neither the RMC nor USACHPPM can perform the survey at the time it is needed, the exception may be granted. The exception may not be used at facilities having qualified in-house personnel.

(5) Facilities that are acquiring an x-ray system should begin coordinating the acceptance procedures with their supporting MER and radiation protection personnel as soon as possible to avoid requests for exceptions.

(6) Exceptions will not be granted for CT or other highly specialized x-ray systems. Facilities acquiring these systems should ensure that the acceptance test is coordinated with the USACHPPM (for CT), the RMC (for systems other than CT), the USAMMA, and the DSCP, as early as possible to avoid delays in releasing the systems for clinical use.

c. Periodic resurveys of the equipment will be performed by a qualified expert at the frequencies specified in the applicable paragraph(s) of this chapter. The minimum requirements for these surveys are also specified in the following paragraphs for specific types of x-ray systems. Additional tests may be performed by the qualified expert (or under the supervision of the qualified expert) at his or her discretion.

5–4. Radiographic systems

A qualified expert will perform an acceptance survey of each radiographic and tomographic x-ray system prior to use on human beings as specified in paragraph 5-3 and a periodic resurvey at least annually thereafter at facilities that are accredited by (or are seeking to become accredited by) the Joint Commission on Accreditation of Healthcare Organizations (JCAHO) and biennially at all other facilities.

a. The acceptance survey will—

(1) Verify that the x-ray system meets all applicable requirements in chapter 4, this bulletin; 21 CFR, chapter 1, subchapter J; the purchase contract; and other electrical and safety standards.

(2) Verify that any shielding and other protective equipment is adequate and functional.

(3) Establish baseline performance levels for comparison with the results of the annual surveys.

b. The annual surveys will include at least the following—

(1) Verification of compliance with the provisions of chapter 4, this bulletin; and 21 CFR, chapter 1, subchapter J; and comparison with the baseline values from the acceptance survey.

(2) Verification of overload protective circuit, if provided.

(3) Measurement of the parameters specified below, and comparison with the baseline values from the acceptance survey.

(a) Grid uniformity and alignment.

(b) ESE and film optical density. (See para 5-10.)

5–5. Dental systems

A qualified expert will perform an acceptance survey of each dental x-ray system prior to use on human beings as specified in paragraph 5-3 and a periodic resurvey at least biennially thereafter.

a. The acceptance survey will—

(1) Verify that the x-ray system meets all applicable requirements in chapter 4, this bulletin; 21 CFR, chapter 1, subchapter J; the purchase contract; and other electrical and safety standards.

(2) Verify that any shielding and other protective equipment is adequate and functional.

(3) Establish baseline performance levels for comparison with the results of the annual surveys.

b. The biennial surveys will include at least the following—

(1) Verification of compliance with the provisions of chapter 4, this bulletin; and 21 CFR, chapter 1, subchapter J; and comparison with the baseline values from the acceptance survey.

(2) Verification of overload protective circuit, if provided.

(3) Measurement of ESE and film optical density. (See para 5-10.)

5–6. Veterinary systems

A qualified expert will perform an initial survey of each veterinary x-ray system prior to use and a periodic resurvey at least triennially thereafter.

The initial and periodic surveys will—

a. Verify that the x-ray system meets all applicable requirements in chapter 4, this bulletin; 21 CFR, chapter 1, subchapter J; the purchase contract; and other electrical and safety standards.

(See para 4-10.) At a minimum the system will meet any standards that affect the radiation dose received by personnel.

b. Verify that any shielding and other protective equipment is adequate and functional.

5–7. Mammographic systems

A qualified expert will perform a survey of each mammographic x-ray system—

a. Prior to use on human beings and periodically thereafter.

b. Following the requirements of the Mammography Quality Standards Act of 1994 (MQSA) as amended.

5–8. Fluoroscopic systems

A qualified expert will perform an acceptance survey of each fluoroscopic x-ray system prior to use on human beings and a periodic resurvey at least annually thereafter at facilities that are accredited by (or are seeking to become accredited by) the JCAHO and biennially at all other facilities.

a. The acceptance survey will—

(1) Include verification that the x-ray system meets all applicable requirements in chapter 4 of this bulletin; 21 CFR, chapter 1, subchapter J; the purchase contract; and other electrical and safety standards.

(2) Establish baseline performance levels for comparison with the results of the annual surveys.

b. The annual surveys will include at least the following—

(1) Verification of compliance with the provisions of chapter 4 of this bulletin; and 21 CFR, chapter 1, subchapter J; and comparison with the baseline values from the acceptance survey.

(2) Verification of overload protective circuit, if provided.

(3) Measurement of the parameters specified below, and comparison with the baseline values from the acceptance survey:

(a) Distortion.

(b) High contrast and low contrast resolution.

(c) Image lag.

(d) Flare.

(e) Typical EERs.

c. The qualified expert will consult with the responsible physician to determine the tolerances for distortion, resolution, lag, and flare.

5–9. Computed tomographic systems

A qualified expert will perform a survey of each CT system prior to use on human beings and annually thereafter.

a. The acceptance survey will—

(1) Include verification that the x-ray system meets all applicable requirements in chapter 4 of this bulletin; 21 CFR, chapter 1, subchapter J; the manufacturer's specifications; and the purchase contract.

(2) Establish baseline performance levels for comparison with the results of the annual surveys.

b. The annual surveys will include at least the following:

(1) Verification of compliance with the provisions of chapter 4 of this bulletin; and 21 CFR, chapter 1, subchapter J; and comparison with the baseline values from the acceptance survey.

(2) Measurement of the parameters specified below, and comparison with the manufacturer's specifications and the baseline values from the acceptance survey. If manufacturer's specifications are not provided, a qualified expert should establish appropriate control values for QC purposes.

(a) CT number calibration for air and water.

(b) Noise and uniformity.

(c) Slice localization from radiographic (scout) image.

(d) High contrast resolution or modulation transfer function, or both.

(e) Low contrast resolution.

(f) Table position indicator accuracy.

(g) Table indexing accuracy.

(h) Radiation profile and sensitivity profile.

(i) CTDI.

(j) Surface dose.

5–10. Assessment of image quality and entrance skin exposure

a. Prior to data collection, the qualified expert will—

(1) Ensure that the film processor has been optimized.

(2) Take measurements using the prescribed diagnostic clinical techniques for the specific projections in the mode used by the technologist (that is, manual mode, AEC mode, or automatic brightness control mode). The technique factor set and the actual technique factors (that is, in AEC or automatic brightness control modes where they may differ) should be recorded.

b. A qualified expert will—

(1) Use three CDRH patient equivalent phantoms to measure the ESE and typical fluoroscopic EERs required by paragraphs 5-3*b* (3) *(b)* and 5-8*b* (3) *(e)*, respectively. These three phantoms are the CDRH chest phantom, CDRH abdomen/LS spine phantom, and the CDRH dental phantom. The

phantoms are described in appendix B. Facilities may purchase the phantoms from CDRH or a private supplier or have them manufactured.

(2) Take the exposure measurements using the following typical clinical projections:

(a) For radiographic systems. The chest and abdomen/LS spine projections using the chest and abdomen/LS spine phantoms, respectively.

(b) For fluoroscopic systems. The upper GI projection using the abdomen/LS spine phantom.

(c) For dental systems. A typical intraoral projection using the dental phantom.

(3) Ensure that the measured ESE is within the presidential limits for ESE given in table 5-1. It is recommended that the ESEs be between the 1st and 3rd quartile values given in tables 5-2 through 5-4 for the chest, abdomen, and LS spine, respectively. (The optical density of the images of the projections should be between 1.0 and 1.5 and will be between 1.0 and 1.7.) Dental ESEs should be within the range specified in table 5-5, and optical density values should be between 1.5 and 2.0. Tables 5-1 through 5-5 are located at the end of this chapter.

5–11. Personal protective equipment

Evaluation of personal protective equipment is important in keeping doses ALARA to all attending personnel involved in radiography. The physician, dentist, or veterinarian-in-charge—

a. Is responsible for the working conditions and for the protection of patients and occupationally exposed individuals from needless exposure to ionizing radiation.

b. Should ensure that all lead aprons, gloves, drapes, gonad shields, and other lead vinyl flexible shields are checked/inspected semiannually, and will ensure that they are checked/inspected at least annually for safety defects.

c. Will replace defective aprons, gloves, drapes, gonad shields, and other lead vinyl flexible shields.

d. Will provide appropriate devices for the proper storage of lead aprons and gloves to minimize impairment by improper handling and storage. Protective aprons should be hung or laid flat so that the integrity of the shielding is not compromised.

e. Will maintain radiographic or other appropriate written records. The records may include the date of the inspection, a list of the items inspected, a dated radiograph of each item inspected, and the name of the technologist who performed the inspection. If any item is found to be defective, note the defect in the written record and describe the corrective action taken.

5–12. Facility surveys

a. A qualified expert will—

(1) Survey all diagnostic x-ray facilities to ensure that radiation exposure levels in the surrounding areas due to operation of the equipment do not exceed Federal and Army exposure standards. This includes an assessment of whether the areas are controlled or uncontrolled areas (for the purpose of radiation protection), the occupancy and use of the areas, and whether the barrier is a primary or secondary barrier.

(2) Perform these surveys—

(a) Prior to using newly installed x-ray equipment or using a new x-ray facility for clinical purposes (see para 5-3).

(b) After any change in a system component, equipment, subsystem, workload, or operating conditions that may result in increased radiation exposure.

b. If the survey indicates that the facility does not conform to Federal and Army radiation protection standards, the qualified shielding expert will determine the potential health hazards associated with the facility and provide recommendations for corrective actions. The actions may include—

(1) Adding supplementary shielding.

(2) Imposing restrictions on the use of the equipment (workload or use factor).

(3) Imposing restrictions on the occupancy of the affected area.

c. If supplementary shielding is installed or other physical corrections are made to the facility, a qualified expert will perform a resurvey to assess the adequacy of the corrective actions.

Table 5–1. Presidential ESE guides

Examination (Projection)	Maximum ESE (mR)
Chest (P/A)	30
Skull (Law)	300
Abdomen (A/P)	750
Cervical Spine (A/P)	250
Thoracic Spine (A/P)	900
Full Spine (A/P)	300
Limbo-Sacral Spine (A/P)	1000
Retrograde Pyelogram (A/P)	900
Feet (D/P)	270
Dental (Bitewing or Periapical)	700

Legend: P/A = posterior/anterior; Law = lateral; A/P = anterior/posterior; D/P = distal/proximal

Table 5–2. Free-in-air chest ESE (mR) at 23 cm by relative film-screen speed

Film Speed	100		200		300		400		500+	
Scatter Suppression	Grid	None	Grid	None	Grid	None	Grid	None	Grid	None
1st Quartile	18.5	22.1	16.4	8.2	9.7	5.6	9.2	5.7	8.2	4.8
Median	29.5	22.1	24.8	11.6	13.6	6.7	11.6	6.9	11.8	8.4
3rd Quartile	38.6	22.1	32.2	18.1	18.1	9.2	16.0	8.4	16.0	14.7
Mean	31.4	22.1	25.2	14.9	15.2	8.1	13.5	7.4	11.8	10.7

Table 5–3. Free-in-air abdomen ESE (mR) at 23 cm by relative film-screen speed

Film Speed	100		200		300		400		500+	
Scatter Suppression	Grid	None	Grid	None	Grid	None	Grid	None	Grid	None
1st Quartile	376	718	322	-	227	-	220	346	144	-
Median	553	718	475	-	315	-	301	346	246	-
3rd Quartile	731	718	691	-	440	-	433	346	335	-
Mean	553	718	580	-	351	-	350	346	250	-

Table 5–4. Free-in-air LS spine ESE (mR) at 23 cm by relative film-screen speed

Film Speed	100		200		300		400		500+	
Scatter Suppression	Grid	None	Grid	None	Grid	None	Grid	None	Grid	None
1st Quartile	290	819	318	-	267	-	252	459	136	-
Median	361	819	671	-	366	-	333	459	308	-
3rd Quartile	944	819	1172	-	517	-	487	459	385	-
Mean	532	819	813	-	420	-	383	459	273	-

Table 5–5. Acceptable x-ray exposure ranges using the dental phantom

"D" Speed Film		
kVp	Lower Limit (mR)	Upper Limit (mR)
50	400	280
55	370	250
60	320	220
65	270	190
70	230	165
75	180	130
80	160	115
85	140	105
90	120	95
95	100	85
100	90	70

"E" Speed Film		
kVp	Lower Limit (mR)	Upper Limit (mR)
50	220	550
55	190	520
60	170	475
65	145	415
70	125	360
75	100	305
80	85	260
85	80	230
90	70	210
95	60	195
100	50	180

CHAPTER 6

IMAGE QUALITY ASSURANCE/QUALITY CONTROL PROGRAM FOR DIAGNOSTIC X-RAY SYSTEMS AND ANCILLARY EQUIPMENT

Section I. INTRODUCTION

6–1. Scope

This chapter—

a. Provides procedures for the QC of film handling and processing and the monitoring of image quality.

b. Does NOT specifically address digital x-ray systems. However, each facility using digital systems will establish a digital QAP that ensures compliance with the manufacturer's specifications and current industry standards.

6–2. General

a. Each physician, dentist, or veterinarian in charge will—

(1) Ensure that a QA manual is developed with the basic procedures to assure image quality. A sample QA manual is provided in appendix C. This manual will—

(a) Address the basic requirements listed in paragraph 6-3 and section II.

(b) Be signed by the person who has overall responsibility for the IQCP.

(c) Be updated as necessary. Any significant changes in the IQCP will be approved by the person who has overall responsibility for the IQCP.

(d) Contain the most recent records of IQCP monitoring results, records, and the results of corrective actions and reviews.

(e) Be made available to all personnel involved in radiology services.

(2) Implement a recordkeeping format that is readily accessible and that allows easy comparison of monitoring results.

(3) Allow adequate time for personnel to perform the necessary IQCP tasks.

b. A qualified expert will—

(1) Review the IQCP annually, as part of the annual reappraisal of the treatment facility's QAP.

(2) Provide a written report of the review to the chief of radiology or the U.S. Army Dental Activity (DENTAC) RPO.

6–3. Monitoring and evaluation process

Image QC monitoring will be ongoing, criteria-based, planned, and systematic as outlined in the QA manual. The essential steps, common to all IQCPs, in monitoring and evaluation include the following—

a. Assignment of responsibilities. The chief of the radiology department in an MTF or the DENTAC RPO has overall responsibility for the IQCP and the implementation of an effective program. This person identifies the individual(s) responsible for the quality indicators outlined in section II and ensures that the responsibilities are fulfilled.

b. Collect and analyze data. The frequency of monitoring for each of the relevant quality indicators described in section II will be documented in the QA manual. At specified intervals, the QC technologist will—

(1) Collect and analyze the data acquired from the monitoring.

(2) Compare the data with pre-established tolerances and the information analyzed to detect potential problems, trends, and patterns of performance.

c. Tolerance values. Tolerance values have been established for the following indicators.

(1) *Overall repeat rate.* The overall repeat rate for the facility will not be more than 20 percent and should not be more than 10 percent.

(2) *Processor speed.* The processor speed will be not less than 80 and not more than 120. Note that processor speed as used in this paragraph is not the same as the index of speed in (3) below. (See para 6-4b and app D.)

(3) *Processor mid-density (MD), density difference (DD), and base-plus-fog (B + F).* The MD and DD will not deviate from the established operating level by more than 0.2 optical densities. The B + F will not exceed the established operating level by more than 0.05. Procedures for establishing operating levels are given in appendix E.

(4) *Processor solution temperature.* The processor developer temperature will be within ±0.5 degrees Fahrenheit (°F) (±0.3 degrees Celsius (°C)) of the manufacturer's recommended temperature. The fixer temperature will be within ±5 °F (±3 °C) of the developer temperature.

d. Corrective action. Action will be taken to resolve identified problems. To be effective, the corrective action will be appropriate to the cause of the identified problem. A plan of corrective action should identify—

(1) Who or what is expected to change.

(2) Who is responsible for implementing the action.

(3) What action is appropriate.

(4) When change is expected to occur.

e. Assess the actions and document improvement. The QC technologist will monitor corrective actions until the problem is resolved.

f. Training. The QC technologist will—

(1) Disseminate, throughout the diagnostic radiology service, the relevant findings from monitoring and evaluation activities.

(2) Conduct annual training on the IQCP in general and on the relevant findings.

g. Reports. The QC technologist will report department QC activities, findings, conclusions, recommendations, actions taken, results of actions taken, and the results of the annual IQCP review to the person having overall responsibility for the IQCP.

Section II. IMAGE QUALITY CONTROL PROCEDURES

6–4. Processing quality control

a. Handling and storage of photosensitive radiographic materials. Photographic materials are sensitive to light, heat, humidity, chemical contamination, mechanical stress, and radiation.

(1) Store film at temperatures between 60 °F (16 °C) and 70 °F (21 °C). Store open packages of film in an area where the humidity is between 40 and 60 percent.

(2) Store photographic materials away from chemical fumes or radiation. Radiation includes radionuclides, radioactive wastes, and direct or scattered x-rays.

(3) Since film is pressure sensitive, always store boxes of film standing on end. Two or three boxes of film stacked horizontally can result in pressure artifacts on the film.

b. Evaluation of optimum image quality processing speed. Evaluation of the processor speed determines whether the processor is processing optimally; then processor monitoring ensures that consistency is maintained. An empirical test method for evaluating processing quality is the Sensitometric Technique for the Evaluation of Processing (STEP), which is described in appendix D.

(1) Follow the film manufacturer's processing recommendations for each type of radiographic film, specifically for development time, temperature, replenishment rates, processor maintenance, and chemical mixing.

(2) Use the STEP when the processing procedures are changed and at least quarterly. The value of the standard sensitometric step number that yields the processor speed will be between 80 and 120.

(3) Re-establish the operating levels of the processor every time processing conditions (type of film, chemicals, processing time, etc.) are changed. Procedures for establishing operating levels are found in appendix E.

c. Processor monitoring. Evaluate daily the MD, DD, B + F, and the solution temperature for each film processor. A complete description of how to conduct this monitoring is provided in appendix D.

(1) If more than one film type is used in a processor, monitor the processor for each type of film.

(2) Measure the solution temperature using a non-mercury thermometer with a specified accuracy of ±0.2 °F (±0.1 °C) or better. The temperature indicated by a built-in processor thermometer can be used, but the processor thermometer will be compared to and calibrated with an external thermometer at least monthly.

(3) Expose, process, and evaluate sensitometric control strips and plot the results (that is, MD, DD, and B + F values) daily, before clinical films are processed. To be effective, QC requires immediate feedback. If the strips are processed and the densities are read or plotted later, then the program is merely providing quality monitoring, not QC.

(4) Whenever a new box of "sensitometric" or "QC" film is opened, follow a crossover procedure to evaluate the characteristics of the new film. A description of one such procedure is provided in appendix F.

d. Processor maintenance. Keep a processor maintenance log for each processor to record all service on the unit. This log can be used to correlate processor service with processor performance. Perform the following preventive maintenance tasks at the manufacturer's specified intervals. If no intervals are specified, then perform the tasks at the intervals described below.

(1) Clean the developer and fixer crossover racks daily.

(2) Wash the developer and fixer racks weekly or as recommended by the manufacturer.

(3) Inspect in-line filter screens quarterly.

(4) Determine replenishment rates quarterly.

(5) Measure dry-to-dry time quarterly.

(6) Completely clean the processor.

6–5. Image receptor quality control and viewboxes

a. Cassettes. The cassette should identify the screen-film combination contained.

(1) If different screen-film combinations are used in the department, distinctively mark each cassette containing a particular combination so that it is virtually impossible for the x-ray technologist to use the wrong cassette for an examination. In addition, mark each cassette in such a way that the individual in the darkroom can clearly identify the particular cassette so that it will be loaded with the proper film.

(2) Assign a number to each cassette. This number should also appear on the screen in indelible ink, or a lead number placed on the outside of the cassette should make a readable image on the radiograph.

b. Film/screen evaluations. Adequate film/screen contact over the entire surface of a cassette is essential to prevent blurring or other image distortions.

(1) Evaluate the film/screen contact, identify artifacts, and check for light leaks on—

(a) All new cassettes prior to clinical use.

(b) All cassettes semiannually.

(2) Clean the screens (with manufacturer's recommended cleaning solution only) at least semiannually.

(3) Evaluate the film/screen combination and effect on processor speed before any proposed change to the film or screens.

c. Viewboxes. In a radiographic reading room that has banks of viewboxes, evaluate the consistency of light output from one box to another and the viewbox surface conditions at least semiannually. Use one type of bulb (by a single manufacturer) throughout a specific department. Replace the bulbs at least every 1500 hours of use.

6–6. Darkroom quality control

The most noticeable effect of film fog is a decrease in the overall contrast of a radiograph in the midrange densities that are of primary interest to the clinician. Exposing stored film to high temperatures or radiation can cause fog, but it is usually caused by light leaks in the darkroom.

a. Clean darkrooms daily to minimize artifacts on film images.

b. Evaluate the safe light conditions in the darkroom at least semiannually.

c. Evaluate the darkroom for fog leaks at least semiannually. When performing the fog test, use the fastest film normally processed in the darkroom. Two methods for performing fog tests are found in appendix G.

d. There will be no eating or drinking in the darkroom.

6–7. Repeat analysis

Retake or repeat analysis is the best tool for identifying image quality problems and for evaluating the effectiveness of the IQCP.

a. Maintain retake logs daily. For each rejected radiograph, the retake log will include the reason for rejection, the type of examination and projection, the room number, the technologist's name, the x-ray system used (if more than one system is in any given room), and the film cassette number.

b. Review retake logs weekly. The reviewer will ensure rejected radiographs have been recorded in the retake log. Calculate the total repeat rate (that is, divide the total number of rejected films by the total number of films taken). If the total number of films taken is not known, use an estimate. However, clearly indicate the mechanism for making that estimate.

c. Conduct analysis. Conduct further analysis of the retake log (such as retake rate by reason, room, or technologist).

6–8. Dental radiographic facilities

a. All of the requirements described in paragraphs 6-3 through 6-7 apply to dental radiographic facilities. A sample worksheet that may be used for collecting information for completing a dental clinic monthly radiation QA report is shown in figure 6-1, located at the end of this chapter. This worksheet is intended to be only a sample. It should be modified according to the specific needs of each dental facility.

b. Dental radiographic facilities that do not have a high workload of panographic/cephalometric x-ray exams are excepted from the requirements of paragraph 6-4. Such facilities may use a reference radiograph for comparison with daily films to meet monitoring requirements. The QC technologist will—

(1) Expose a film daily using an aluminum step wedge or phantom, such as the Radiographic Normalization and Monitoring Device.

(2) Compare the film with the reference radiograph.

(3) Document any degradation in image quality and the corrective action taken.

6–9. Mammographic radiographic facilities

The MQSA of 1994 requires each mammography site to become accredited through a private nonprofit accreditation body (such as the American College of Radiology's Mammography Accreditation Program) that has been approved by HHS. This legislation requires facilities to establish and maintain an appropriate QC program.

DENTAL CLINIC MONTHLY RADIATION QA REPORT WORKSHEET

Dental Clinic *Camp Swampy* This report is due the last day of *June 2001*

Total Bitewings Exposed *250* Total Bitewings Retakes *17*

Total reason(s) for Bitewing X-ray Retakes (a) *7* (b) *6* (c) *4*

Total PA X-rays Exposed *45* Total PA X-ray Retakes *3*

Total reason(s) for PA X-ray Retakes (a) *2* (b) *0* (c) *1*

Total Panorex Exposed *60* Total Panorex Retakes *4*

Total reason(s) for Panorex retakes (a) *1* (b) *2* (c) *1*

Reasons for "retakes" will be coded:
(A) Patient induced error (for example, the [illegible]nt moved).
(B) Operator error.
(B) Processing error (for example, power failure [illegible]lm got stuck)

Date lead aprons were last fluoroscopically inspec[illegible] *23 Febru[illegible] 2001*

Date lead aprons were last visually inspected *24 Nov[illegible]er 2000*

Date the darkroom integrity and the condition [illegible] the sa[illegible] light in the [illegible]arkroom was tested *26 September 2000*. To do this test, [illegible]ace a coin over an unwrapped PA x-ray film inside the [illegible]arkroom w[illegible] the safe light on. After 5 minutes, develop the film. [illegible]e film shou[illegible]ot show a visible circle where the coin was placed. [illegible] does, cor[illegible]ive actions are needed.

Date of the last documented training [illegible]ation prote[illegible]ion and the biological effects of radiation *18 October 200[illegible]*.

Was there any other [illegible]ing dur[illegible]g thi[illegible]h's reporting period? *No*

Were there any positive th[illegible]molu[illegible] dosi[illegible]eters (TLDs)? *No*
If "yes," why? _____

The following statements shou[illegible] have a "yes" answer. If there is a "negative" response [illegible]any one of them, pl[illegible]se list the statement number(s), and explain why.

Yes	No	
X	___	1. O[illegible]ntist order[illegible] radiographs.
X	___	2. Lead [illegible] are used on every patient, if appropriate.
___	*X*	3. Lea[illegible] apr[illegible] stored/hung properly between patient use.
X	___	4. "[illegible]diologi[illegible] Hazard" signs are hung on the door(s) of the x-ray rooms.
X	___	5. There is a highly visible sign in the x-ray room that requests female patient's to inform the x-ray technician if they are pregnant.
[illegible]	___	6. The dental "Radiographic Normalizing and Monitoring Device" or the "Densitometry/Sensitometry Device" is used daily to evaluate radiographic and processing quality.
X	___	7. There is an effective eye lavage in the x-ray area.
X	___	8. When working with x-ray chemicals, the x-ray technician is using an apron, eye protection, and gloves.
Yes	No	
[illegible]	___	9. There are charts of current techniques posted by or on the x-ray machine and processor.
X	___	10. Personnel dosimetry, if issued, are labeled with

SAMPLE

Figure 6–1. Dental Clinic Monthly Radiation QA Report Worksheet (Sample)

personnel identification.

X ___ 11. Personnel dosimetry, if issued, are worn by personnel exposing radiographs.

X ___ 12. The TLDs, if issued, are stored in a location conveniently close to, but outside the radiation area with the control TLDs.

X ___ 13. Infection control materials (for example, gloves, plastic wrap, plastic bags) are being changed between each patient.

X ___ 14. X-ray film is stored and handled properly to prevent fogging and other damage.

3. A leaded apron was found folded on a shelf. All personnel were informed of the proper way to store leaded aprons.

Please Note: Due to patient workload and varying numbers of personnel working with dental x-ray equipment, some clinics are not required to issue personnel dosimetry. This should be taken into account prior to using this sample worksheet. This worksheet is intended to be only a sample. It should be modified according to specific needs of each dental facility.

SAMPLE

Figure 6–1. Dental Clinic Monthly Radiation QA Report Worksheet (Sample) — Continued

CHAPTER 7

USE OF MEDICAL AND DENTAL FIELD X-RAY SYSTEMS

7–1. Scope

This chapter—

a. Relates to the use of diagnostic x-ray systems in a field environment.

b. Is written to provide a mechanism to ensure quality-of-care during radiographic procedures is maintained in deployment operations and to provide some guidance to medical/dental units for necessary training during field exercises.

c. Provides procedures for waiving compliance requirements that cannot be met due to operational considerations during field exercises. However, it requires commanders to document the rationale for granting these waivers.

7–2. Procedures

a. The commander of a medical group deployed to support military operations will designate, in writing, a medical group RPO. When possible, the appointed RPO should be a preventive medicine sciences officer with a specialty in nuclear medical science (67C72A).

b. The medical group RPO—

(1) Ensures radiographic equipment is functioning properly and is being used appropriately.

(2) Maintains documentation of calibrations, surveys, inventories, and dosimetry results.

(3) Serves as the primary consultant to the medical group commander on all issues related to exposure to ionizing radiation.

(4) Maintains documentation of all waivers to requirements of this bulletin, and provides a quarterly summary report of such waivers to the medical group commander and to the MEDCOM radiological hygiene consultant.

(5) Provides guidance to medical/dental units on radiation protection policies applicable to the operation.

(6) Serves as the dosimetry coordinator and as the central point of contact for all questions regarding radiation exposures of occupational workers.

(7) Provides x-ray surveys and RPP reviews as required by this bulletin.

c. Commanders of medical and dental units—

(1) Designate in writing a qualified RPO.

(2) Document and implement a radiation protection and QAP according to the provisions of this bulletin.

(3) Ensure performance of the annual training and equipment checks specified in paragraph 7-5. This is critical, particularly during times in garrison, since obtaining support during deployment operations may be difficult.

(4) Upon unit deployment—

(a) Initiate and document a review of the radiation protection and QA programs prior to performing x-rays on patients. Perform and document program reviews quarterly. A sample RPP evaluation checklist designed to assist the reviewer in gathering information for these reviews is shown in figure 7-1, located at the end of this chapter. This checklist is intended to be only a sample and may be modified to meet the needs of the reviewer.

(b) Ensure that a medical maintenance calibration and a health physics radiation safety survey of radiographic x-ray systems have been performed within the past 12 months.

(c) Forward an inventory of all operable x-ray systems to the medical group RPO. The inventory should include the type of system, model number, serial number, date of last calibration, and date of last radiation safety survey. This coordination is necessary to establish communication with the medical group RPO. The medical group RPO will use the information to determine what surveys are required and what type of dosimetry, if any, to issue to the unit.

(d) Ensure compliance with the requirements specified in this bulletin, except as authorized by waiver and the medical group RPO. Promptly report situations to the medical group RPO when requirements of this bulletin are not met.

(e) Ensure that radiographic x-ray systems are in compliance with the performance standards contained in this bulletin prior to use on patients.

(f) Ensure that authorized equipment is used only for purposes for which the equipment was designed (that is, do not use dental x-ray equipment to x-ray wrists or ankles).

7–3. General

a. Balancing operational requirements while maintaining radiographic image quality and minimizing exposure to ionizing radiation from the use of radiographic x-ray systems can present field commanders with unique challenges. During deployment, medical operations are conducted in locations that generally do not meet normal x-ray facility

design standards. Normal standards of medical care may not be maintainable during this type of military operation. Commanders of deployed medical units must continue to provide the highest quality of medical care possible while maintaining acceptable image quality and keeping radiation exposures to personnel ALARA.

b. Physicians, radiologists, and dentists interpreting x-ray images produced with field x-ray systems will coordinate with—

(1) The x-ray technologists performing x-rays to improve image quality and minimize repeated x-ray exams.

(2) The operation's RPO to establish policies for radiographic image quality and radiation safety.

7–4. Applicability of radiation safety requirements for field x-ray systems

a. Design and performance standards. Field radiographic x-ray systems will comply with all the design and performance requirements specified in chapter 4, this bulletin.

b. Maintenance, radiation protection, and QC requirements. Users of field x-ray systems will comply with all the requirements of this bulletin, except when granted a waiver by the medical/dental unit commander. Waivers are explained in detail in paragraph 7-6.

c. Use of field x-ray systems.

(1) In the event of a medical injury during field operations, medical unit commanders will ensure full compliance with this bulletin prior to use of any field x-ray system on humans.

(2) During a training exercise, the responsible physician will make the decision to perform an x-ray procedure based on the patient's condition.

(3) Use of x-ray systems on humans solely for the purpose of training is strictly prohibited.

7–5. Requirements for units with field x-ray systems

a. Annual training and equipment checks.

(1) Medical/Dental x-ray technologists assigned to deployable units should spend a minimum of 2 weeks every 6 months performing x-ray procedures in an active medical/dental treatment facility. This is required to ensure they maintain their skills as qualified x-ray technologists. Hospital medical and dental x-ray technologists should also spend 2 weeks every 6 months training on field x-ray equipment.

(2) Check medical x-ray film cassettes to ensure the film used matches the screens within the cassettes. The field x-ray film should be fast speed, and the screens should be "rare earth" screens. When field film/screen combinations are incorrect, significant increases in dose and decreases in image quality can be expected. Questions about the condition of the field x-ray screens or the appropriateness of the film/screen combination should be resolved during the annual training periods or through consultations with the RPO.

(3) Survey and calibrate x-ray systems annually. Field systems in long-term storage, such as Army War Reserve Materiel, do not require annual radiation protection or QA surveys, but they will be surveyed prior to use on humans.

(4) Periodically evaluate QC supplies and equipment to ensure adequate amounts of supplies and appropriate equipment are on hand and functional for use during deployments. Appropriate equipment includes non-mercury thermometers, step wedges, sensitometers/densitometers, film processor in-line filter screens, and cleaning supplies for the x-ray processor.

b. Radiation protection requirements during deployments.

(1) *General standard.* Patients, staff, and personnel in adjacent areas will be afforded the same level of protection from exposure to ionizing radiation as provided during peacetime. Only the unit commander, with guidance from the medical group RPO, can authorize variations from this requirement as explained in paragraph 7-6.

(2) *Standard of care.*

(a) Physicians may be required to use less-than-ideal x-ray facilities to assist in managing trauma cases or to generate information required for the immediate management of a patient's care. The physician will have to weigh the risks and benefits to the patient and decide when to proceed with radiographic examinations under less-than-ideal conditions.

(b) Physicians will not order x-rays under less-than-ideal conditions when assessing chronic conditions, performing medical screening, or as part of routine physical exams. Less-than-ideal conditions include units without a proper QC program.

(3) *Control of exposures to medical/dental personnel.* X-ray facilities are normally designed to maintain exposures below 10 mR per week for occupationally exposed individuals.

(a) Exposures to x-ray technologists can be kept below 10 mR per week by providing them with a portable shield to stand behind during x-ray procedures. The shield provides adequate protection to the technologist from portable radiographic x-ray systems.

(b) If portable shields are not available, use lead aprons.

(c) If the technologist has a reasonable probability of exceeding 10 mR per week, issue him or her a dosimeter per AR 11-9 and DA Pam 40-18/DLAI 1000.30.

(4) *Control of exposures to personnel in adjacent areas.* Efforts will be made to set up facilities so that exposures from x-ray systems to persons in adjacent areas are kept below 2 mR per week. Recommendations to accomplish this task are as follows:

(a) Shielding. The primary beam from the x-ray system will be shielded from adjacent areas. An example of a field expedient shield for the primary beam is the use of a lead protective apron or sand bags between the patient and the adjacent area.

(b) Distance. The exposure from an x-ray system decreases inversely with the square of the distance (doubling the distance will decrease the exposure rate by a factor of four). Maximizing the distance between personnel and the x-ray source will reduce exposures. From a practical perspective, exclusion area dimensions are difficult to establish without a working knowledge of the type and amount of x-ray exposures being taken. From an operational stand point, attempting to establish a large exclusion area around an x-ray system is practically impossible, and the use of portable x-ray systems within the hospital makes this an unreasonable requirement. Some suggestions on how a base commander can minimize the exposures to personnel follow:

1. Base camp configurations that place the empty isoshelters around the x-ray department to create an exclusion area and shield the area are ideal.

2. Using engineer tape around the outside of an x-ray tent or structure and placing signs on the tape stating that x-ray procedures are being performed are almost as effective. By informing people of the presence of a radiation hazard, they will create an exclusion area. If facilities do not post any signs outside their x-ray tents or structures, people may congregate around the outside of these areas and receive unnecessary exposures.

3. If operational setup permits, creating an exclusion of 3-5 m will greatly reduce exposures. Many times in routine peacekeeping deployments, this size exclusion area will be adequate since not that many x-ray examinations are performed.

(c) Time. The shorter the time spent around a radiation source, the smaller the resulting exposure. To accomplish this, ensure that the x-ray structure is not established in an area where people would normally congregate, such as around the dining facility, the recreation facilities, library, chapel, etc. Do not place x-ray units near waiting areas or transportation stops.

(5) *Control of exposures in adjacent areas.* When setting up an x-ray facility that will be taking numerous x-rays every day for extended periods of time, the medical group RPO should be contacted for an exposure survey of the proposed area.

(6) *Power supply considerations.* Poor quality or unstable electrical power significantly affects the x-ray system's calibration. Poor quality electrical power can cause significant variations in the x-ray system's output and increase the number of retakes. Proper placement of generators is critical in maintaining an x-ray system's calibration. The medical maintenance personnel will coordinate power supply requirements with the generator operators during setup. Generators should be located as close to the x-ray systems as practical. They may need dedicated circuits to maintain the x-ray system's accuracy and reproducibility, particularly if there are other devices which draw large currents.

7–6. Waivers during military operations

Full compliance with the requirements of this bulletin may be impossible during military operations. When making the decision to waive selected requirements of this bulletin, one must balance operational requirements with the risks to personnel from decreased radiographic image quality and increased radiation exposure. This is a process of risk management (see Field Manual (FM) 100-14).

a. Authority to authorize waivers from this bulletin.

(1) The unit commander—

(a) In consultation with the medical group RPO, has the authority to waive selected requirements of this bulletin if necessitated by operational requirements.

(b) Will notify the medical group RPO of all waivers granted and the reasons the waivers were granted. When practical, notification of a waiver should be in writing.

(c) Communicates with the medical group RPO to re-establish the requirements of this bulletin as soon as permitted by the operational situation.

(2) The medical group RPO will—

(a) Maintain a log of all waivers issued. This log will contain all of the reports and information forwarded to the RPO according to this chapter.

(b) Consolidate the waivers granted into a quarterly report and submit it to the medical group commander and the MEDCOM radiological hygiene consultant.

b. Waiver considerations.

(1) Waivers are exceptions to policies that may result in—

(a) An increase in radiation exposures to personnel.

(b) A decrease in image quality resulting in a loss of diagnostic information on x-ray films.

(2) Waivers will be—

(a) Limited to situations where the medical benefits to the patient outweigh the risks to the patients and other personnel.

(b) Issued for specific situations that have fixed time lengths.

c. Availability of assistance. Prior to considering waivers, local RPOs should seek advice from the medical group RPO.

RADIATION PROTECTION PROGRAM EVALUATION CHECKLIST

Facility: ***Camp Swampy Health Clinic*** Date: ***17 October 2001***

Unit: ***Radiology***	Survey Officer: ***1LT Smith***
APO: ***123 Swampy Blvd***	OIC/NCOIC (POC): ***SSG Jones***
Kaserne: ***N/A***	Civilian Town: ***Camp Swampy, MD***
Phone Number: ***(123) 456-7890***	Fax: ***(123) 456-7891***

Information Provided to (Name/Title): ***CPT Smythe***

Information Provided to (Name/Title): ***SSG Jones***

Information Provided to (Name/Title): ***SGT Johnson***

Information Provided to (Name/Title):

A. RADIATION PROTECTION	YES	NO	N/A
1. Is there a Radiation Protection Officer (RPO) assigned in writing? Name: ***CPT John Smythe***		X	
2. Is there an inventory/current registry of all ionizing radiation producing devices?		X	
3. Is there a clinic-specific radiation protection Standing Operating Procedure (SOP) available for review? Title: ***Radiation Protection SOP*** Date: ***14 June 2000***	X		
4. Does the SOP address personnel dosimetry, radiation quality assurance, who is authorized to order x-rays, training, and radiation protection principles? If not, what needs to be added?		X	
5. Are protective shielding devices (aprons, thyroid shields) available, properly stored when not in use and inspected annually?		X	
6. Do all x-ray rooms have adequate protective shielding for both the operator and personnel in adjacent unrestricted areas? (If not, explain in REMARKS Section.)	X		
7. Are all x-ray rooms' interlocks functioning properly and being checked at least once every months? (If not, explain in REMARKS Section.)	X		
8. Are "Caution x-rays" signs posted in appropriate languages? (Except in Diagnostic x-ray facilities where such signs may be a source of apprehension to patients, provided the entrance to the radiation area is strictly controlled.)	X		
9. Are "Warning to Pregnant Patient" signs posted in x-ray waiting areas and x-ray rooms? Signs should be both in English and another language commonly used by local patients.		X	

B. PERSONNEL DOSIMETRY	YES	NO	N/A
10. Do individuals receive an annual written report of their occupational exposure?	X		
11. If an administrative dose was assigned, has it been properly annotated in the worker's record with the mathematics involved?			X
12. If an administrative dose was assigned to an individual, is a copy of the letter informing Ionizing Radiation Dosimetry Center (IRDC) in the respective medical record?			X
13. Have DD Forms 1952 been filled out for each occupationally exposed individual whether issued a dosimeter or not?		X	

SAMPLE

Figure 7-1. Radiation Protection Program Evaluation Checklist (Sample)

B. PERSONNEL DOSIMETRY (Cont)	YES	NO	N/A
14. Are Automated Dosimetry Reports (ADRs) maintained on file? Where? ***Radiology Office***		X	
15. Are the Thermoluminescent Dosimeters (TLDs) located conveniently close to, but outside of, the radiation area with a control dosimeter?	X		
16. Is the TLD storage location approved by the RPO?	X		
17. Are TLDs labeled with personal identification?	X		
18. Are the TLD "windows" free of obstruction and properly worn?		X	
C. RADIOGRAPHIC QUALITY CONTROL	**YES**	**NO**	**N/A**
19. Is sensitometry or step wedge data plotted daily and reviewed weekly for trends and corrective action?	X		
20. Are daily processor checks and detailed film processing procedures posted?			X
21. Is the processor maintenance documented and cleaning scheduled at least quarterly?		X	
22. Is a retake log maintained and reviewed weekly by a supervisor?		X	
23. Is the darkroom tested for proper safe-light conditions and is the room free of light leaks?			
24. Is the base + fog optical density less than 0.2?	X		
25. Are the film cassettes cleaned routinely and checked for light-leaks and film screen-contact at least quarterly?		X	
26. Is x-ray film used prior to the expiration date (plus 6 months) on the box?		X	
27. Is x-ray film stored in a cool, dark area or light-tight box?		X	
28. Are current technique charts, x-ray tube cooling curves and tube rating charts posted near on the x-ray control panel of each x-ray system? (If the system has a heat calculator, posting of the tube rating/cooling charts is not required.)	X		
29. Are view boxes evaluated quarterly for consistency of light output and are the surfaces clean and uniform transparency?		X	
D. TRAINING	**YES**	**NO**	**N/A**
30. Have all x-ray technologists who perform independent x-ray procedures completed the required Specialist Course (91P/E) or equivalent?		X	
31. Are student x-ray technologists supervised by a qualified technologist at all times?	X		
32. Is training on radiation protection and the biological effects of radiation conducted and documented at least annually?	X		

REMARKS:

4. The SOP needs to include information regarding who may order x-rays.

No administrative doses have been assigned.

13. DD Form 1952 must be filled out prior to issuing a dosimeter.

20. Film processing procedures need to be posted near the processor.

22. The retake log needs to be reviewed weekly.

SAMPLE

Figure 7–1. Radiation Protection Program Evaluation Checklist (Sample) — Continued

CHAPTER 8
THERAPEUTIC X-RAY SYSTEMS

Section I. INTRODUCTION

8–1. Scope

This chapter provides guidance on design requirements, performance standards, surveys, and use of therapeutic x-ray systems and facilities.

8–2. Medical physicist

a. Any job description for a Department of the Army Civilian medical physicist will specify the requirement to comply with this bulletin.

b. The contract for any civilian medical physicist providing medical physicist services will also specify the requirement to comply with this bulletin.

c. The medical physicist will—

(1) Notify the RPO immediately of any therapeutic misadministrations.

(2) Actively assist the RPO by managing the radiation therapy QAP and meeting the misadministration reporting requirements outlined in chapter 9.

(3) Be a voting member of the radiation control committee (RCC). A civilian contract medical physicist should be an RCC member where contractually feasible.

Section II. THERAPEUTIC X-RAY SYSTEMS WITH ENERGIES UP TO 1 MEGAVOLT

8–3. User standards

a. Unless the system is secured against unauthorized use, do not leave it unattended.

b. When a patient must be held in position for radiation therapy, use mechanical supporting or restraining devices.

c. During operation, do not hold the tube housing assembly by hand unless the system is designed to require such holding and the peak tube potential of the system does not exceed 50 kVp. In such cases, the holder will wear protective gloves and apron of not less than 0.5 mm lead equivalency at 100 kVp.

d. No individual other than the patient will be in the treatment room—

(1) Unless such individual is protected by a barrier sufficient to meet the exposure standards of AR 11-9.

(2) During exposures from x-ray systems operating above 150 kVp.

e. Do not use the x-ray system in the administration of radiation therapy unless the calibrations and spot checks have been performed per the provisions of paragraph 8-5.

8–4. Equipment design requirements and performance standards

a. Leakage radiation. When the tube is operated at its leakage technique factors, the leakage radiation will not exceed the applicable values specified below.

(1) *0-50 kilovolt (kV) systems.* The leakage radiation exposure will not exceed 100 mR (2.58 x 10^{-5} C/kg) in 1 hour at 5 cm from the surface of the tube housing assembly.

(2) *50-150 kV systems.* For systems that were manufactured or installed prior to the effective date of this bulletin, the leakage radiation exposure will not exceed 1 R (2.58 x 10^{-4} C/kg) in 1 hour at 1 m from the source.

(3) *50-150 kV systems.* For systems that are manufactured on or after the effective date of this bulletin, the leakage radiation exposure will not exceed 100 mR (2.58 x 10^{-5} C/kg) in 1 hour at 1 m from the source.

(4) *151-500 kV systems.* The leakage radiation exposure will not exceed 1 R (2.58 x 10^{-4} C/kg) in 1 hour at 1 m from the source.

b. Permanent beam-limiting devices. Permanent fixed diaphragms or cones used for limiting the primary beam will provide at least the same degree of protection as required for the tube housing assembly.

c. Removable and adjustable beam-limiting devices.

(1) Removable beam-limiting devices will, for the portion of the primary beam to be blocked by these devices, transmit not more than 1 percent of the primary beam at the maximum tube potential and the maximum treatment filter.

(2) Adjustable beam-limiting devices will, for

the portion of the primary beam to be blocked by these devices, transmit not more than—

(a) 5 percent of the primary beam at the maximum tube potential and the maximum treatment filter, if installed before the effective date of this bulletin.

(b) 1 percent of the primary beam at the maximum tube potential and the maximum treatment filter, if installed after the effective date of this bulletin.

(3) The requirements of (1) and (2) above do not apply to auxiliary blocks or materials placed in the primary beam to shape the primary beam to the individual patient.

d. Filter system. The filter system will be designed so that—

(1) The filters cannot be accidentally displaced at any possible tube orientation.

(2) The radiation at 5 cm from the filter insertion slot opening does not exceed 30 R/hr (7.74 x 10^{-3} C/kg · hr) under any operating conditions.

(3) Each filter is marked to indicate its material of construction and its thickness. For wedge filters, the wedge angle will appear on the wedge or wedge tray.

e. Tube immobilization. The tube housing assembly will be capable of being immobilized for stationary treatments.

f. Focal spot marking. The tube housing assembly will be marked so that it is possible to determine the location of the focal spot to within 5 mm. The marking will be readily accessible for use during calibration procedures.

g. Beam block. Contact therapy tube housing assemblies will have a removable shield of at least 0.5 mm lead equivalency at 100 kVp that can be positioned over the entire primary beam exit port during periods when the beam is not in use.

h. Beam monitor system. Systems of greater than 150 kV, manufactured after the effective date of this bulletin, will have a beam monitor system that—

(1) Has the detector of the monitor system interlocked to prevent incorrect positioning.

(2) Does not allow irradiation until a preselected value of exposure is made at the treatment control panel.

(3) Independently terminates irradiation when the preselected exposure is reached.

(4) Is designed so that, in the event of a system malfunction or electrical power failure, the dose administered to a patient prior to the system malfunction or power failure can be accurately determined.

(5) Has a display at the control panel from which the dose at a reference point in soft tissue can be calculated.

(6) Has a control panel display that maintains the administered dose or time reading until intentionally reset to zero.

(7) Has a control panel display that—

(a) Does not have scale multiplying factors.

(b) Uses a design that displays increasing dose by increasing numbers.

i. Timer. A timer with a display will be provided at the treatment control panel. The timer will—

(1) Have a preset time selector and an elapsed or countdown time indicator.

(2) Be a cumulative timer which activates with the production of radiation and retains its reading after irradiation is interrupted or terminated. After irradiation is terminated and before irradiation can be reinitiated, it will be necessary to reset the elapsed time indicator to zero.

(3) Terminate irradiation when a preselected time has elapsed if any dose monitoring system present has not previously terminated irradiation.

(4) Permit accurate presetting and determination of exposure times as short as 1 second.

(5) Not permit an exposure if set at zero.

(6) Not activate until the shutter is opened when irradiation is controlled by a shutter mechanism.

j. Control panel functions. The control panel, in addition to the displays required in other provisions of this section, will have—

(1) An indication of whether electrical power is available at the control panel and if activation of the x-ray tube is possible.

(2) An indication of whether x-rays are being produced.

(3) Means for indicating x-ray tube potential and current.

(4) Means for terminating an exposure at any time.

(5) A locking device that prevents unauthorized use of the x-ray system.

(6) A positive display of specific filter(s) in the beam, for x-ray systems manufactured after the effective date of this bulletin.

k. Multiple tubes. When a control panel may energize more than one x-ray tube—

(1) It will be possible to activate only one x-ray tube at any time.

(2) There will be an indication at the—

(a) Control panel identifying which x-ray tube is energized.

(b) Tube housing assembly when that tube is energized.

l. SSD. There will be means of determining the SSD to within 1 cm.

m. Shutters. Unless it is possible to bring the x-ray output to the prescribed exposure parameters

within 5 seconds, the beam will be automatically attenuated by a shutter having a lead equivalency not less than that of the tube housing assembly. In addition—

(1) After the unit is at operating parameters, the operator will electrically control the shutter from the control panel.

(2) An indication of shutter position will appear at the control panel.

n. Low-filtration x-ray tubes. Each x-ray system equipped with a beryllium or other low-filtration window will be clearly labeled as such upon the tube housing assembly and at the control panel.

8–5. Calibrations and spot checks

a. Calibrations. A full calibration of an x-ray system will be performed prior to initial use with human patients, every 12 months thereafter, and after any change or replacement of components that could cause a change in the radiation output.

(1) The calibration of the radiation output of the x-ray system will be performed—

(a) By or under the supervision of a qualified medical physicist who is physically present at the facility during such calibration.

(b) With a calibrated dosimetry system. The calibration of such a system will have been calibrated by the National Institute of Standards and Technology or by calibration laboratory accredited by the AAPM. The calibration must have been performed within the previous 2 years and after any servicing that may have affected system calibration.

(2) The calibration of the x-ray system will include, but is not limited to, the following determinations:

(a) Verification that the x-ray system is operating in compliance with the design specifications.

(b) The exposure rates as a function of field size, technique factors, filter, and treatment distance used.

(c) The degree of congruence between the radiation field and the field indicated by the localizing device, if such device is present.

(d) An evaluation of the uniformity of the largest radiation field used.

(3) Maintain records of calibration for 5 years after completion of the calibration.

(4) Keep, in the area of the control panel, a copy of the most recent x-ray system calibration.

b. Spot checks. Perform spot checks on x-ray systems capable of operation at greater than 150 kVp. Such spot checks will meet the following requirements:

(1) A qualified expert will—

(a) Develop written spot-check procedures. The procedures will specify—

1. The frequency at which tests or measurements are to be performed.

2. That the spot check will be performed during the calibration specified in *a* above.

(b) Determine the acceptable tolerance for each parameter measured in the spot check. Before the system is used for patient irradiation, investigate and correct the cause for a parameter exceeding a tolerance set by the qualified expert.

(2) If a qualified expert does not perform the spot-check measurement, a qualified expert will review the results of the spot-check measurements within 15 days.

(3) Recalibrate the system whenever a spot check indicates a significant change in the operating characteristics of a system, as specified in the qualified expert's spot-check procedures.

(4) Maintain records of spot-check measurements and any necessary corrective actions for 2 years after completion of the spot-check measurements.

(5) Spot-check measurements of absolute dose may be made with either a dosimetry system calibrated as described in a(1) *(b)* above or one that has been compared with a system that has been so calibrated. This comparison must have been performed within the previous year and after each servicing that may have affected system calibration.

8–6. Facility design

a. Facility design requirements for x-ray systems capable of operating above 50 kVp.

(1) *Aural communication.* Provision will be made for two-way aural communication between the patient and the operator at the control panel. However, where excessive noise levels or treatment requirements make aural communication impractical, other methods of communication will be used.

(2) *Viewing systems.*

(a) Windows, mirrors, closed-circuit television, or an equivalent system will be provided to permit continuous observation of the patient during irradiation and will be located so that the operator can observe the patient from the control panel.

(b) When the primary viewing system is by electronic means, an alternate viewing system, which may be electronic, will be available for use in the event of failure of the primary viewing system.

b. Requirements for x-ray systems capable of operation above 150 kVp.

(1) All protective barriers will be fixed except for entrance doors or beam interceptors.

(2) The control panel will be located outside

the treatment room.

(3) Interlocks will be provided such that all entrance doors must be closed before treatment can be initiated or continued. If the radiation beam is interrupted by any door opening, it will not be possible to restore the machine to operation without closing the door and reinitiating irradiation by manual action at the control panel.

(4) When any door referred to in (3) above is opened while the x-ray tube is activated, the exposure at a distance of 1 m from the source will be reduced to less than 100 mR/hr (2.58×10^{-5} C/kg · hr).

Section III. X-RAY AND ELECTRON THERAPY SYSTEMS WITH ENERGIES OF 1 MEGAVOLT AND ABOVE

8–7. User standards

a. Unless the system is secured against unauthorized use, do not leave the x-ray system unattended.

b. No individual other than the patient will be in the treatment room during treatment of a patient.

c. When a patient must be held in position for radiation therapy, use mechanical supporting or restraining devices.

d. Do not use the system in the administration of radiation therapy unless the requirements of paragraphs 8-9 and 8-11 have been met.

8–8. Equipment design requirements

a. Leakage radiation to the patient area.

(1) For operating conditions producing maximum leakage radiation, the absorbed dose in rads (grays) due to leakage radiation, excluding neutrons, (at any point in a circular plane of 2 m radius centered on and perpendicular to the central axis of the beam at the isocenter or normal treatment distance and outside the maximum primary beam size) will not exceed 0.2 percent of the maximum absorbed dose in rads (grays) of the unattenuated primary beam measured at the point of intersection of the central axis of the beam and the plane surface. Measurements will be averaged over an area up to but not exceeding 100 cm^2 at the positions specified.

(2) For each system, the leakage radiation existing at the positions specified in (1) above for the specified operating conditions will be determined or obtained from the manufacturer. Records on leakage radiation measurements will be maintained.

b. Leakage radiation outside the patient area for new equipment.

(1) The absorbed dose in rads (grays) due to leakage radiation, excluding neutrons (except in the area specified in a(1) above when measured at any point 1 m from the path of the charged particle, before the charged particle strikes the target or window), will not exceed 0.5 percent of the maximum absorbed dose in rads (grays) of the unattenuated primary beam measured at the point of intersection of the central axis of the beam and the circular plane specified in a(1) above.

(2) The actual leakage radiation existing at the positions specified in (1) above for specified operating conditions will be determined or obtained from the manufacturer. Radiation measurements will be averaged over an area up to but not exceeding 100 cm^2.

c. Beam-limiting devices. Adjustable or interchangeable beam-limiting devices will be provided. Such devices will transmit no more than 2 percent of the primary beam at the normal treatment distance for the portion of the primary beam that is to be attenuated by the beam-limiting device. The neutron component of the primary beam will not be included in this requirement.

d. Filters.

(1) Each filter that is removable from the system will be clearly marked with an identification number. Documentation available at the control panel will contain a description of the filter. For wedge filters, the wedge angle will appear on the wedge or wedge tray.

(2) If the absorbed dose rate data required by *p* below relates exclusively to operation with a field flattening or beam scattering filter in place, such filter will be removable only by the use of tools.

(3) For new equipment that uses a system of wedge filters, interchangeable field flattening filters, or interchangeable beam scattering filters—

(a) Irradiation will not be possible until a selection of a filter is made at the treatment control panel.

(b) An interlock system will be provided to prevent irradiation if the filter selected is not in the correct position.

(c) A display will be provided at the treatment control panel showing the filter(s) in use.

(d) An interlock will be provided to prevent irradiation if any filter selection operation carried

out in the treatment room does not agree with the filter selection operation carried out at the treatment control panel.

e. Beam quality. Data sufficient to assure that the following beam quality requirements are met will be determined or obtained from the manufacturer.

(1) The absorbed dose resulting from x-rays in a useful electron beam at a point on the central axis of the beam 10 cm greater than the practical range of the electrons will not exceed the values stated in table 8-1, located at the end of this chapter. Linear interpolation will be used for values not stated.

(2) The medical physicists will determine compliance with (1) above using—

(a) A measurement within a phantom with the incident surface of the phantom at the normal treatment distance and normal to the central axis of the beam.

(b) The largest field size available which does not exceed 15 by 15 cm.

(c) A phantom whose cross-sectional dimensions exceed the measurement radiation field by at least 15 cm and whose depth is sufficient to perform the required measurement.

(3) The absorbed dose at a surface located at the normal treatment distance, at the point of intersection of that surface with the central axis of the primary beam during x-ray irradiation, will not exceed the limits stated in table 8-2, located at the end of this chapter. Linear interpolation will be used for values not stated.

(4) The medical physicist will determine compliance with (3) above by measurements made—

(a) Within a phantom using an instrument that will allow extrapolation to the surface absorbed dose.

(b) Using a phantom whose size and placement meet the requirements of (2) *(c)* above.

(c) After removal of all beam modifying devices that can be removed without the use of tools, except for beam scattering or beam flattening filters.

(d) Using the largest field size available which does not exceed 15 by 15 cm.

(5) The maximum percentage absorbed dose in the primary beam due to neutrons, excluding stray neutron radiation, for specified operating conditions will be determined or obtained from the manufacturer.

f. Beam monitors. All therapy systems will have radiation detectors in the radiation head.

(1) New equipment will have at least two radiation detectors. The detectors will be incorporated into two separate dose monitoring systems.

(2) Existing equipment will have at least one radiation detector. This detector will be incorporated into a primary dose monitoring system.

(3) The detector and the system into which that detector is incorporated will meet the following requirements:

(a) Each detector will be removable only with tools and will be interlocked to prevent incorrect positioning.

(b) It will be possible to calculate the absorbed dose at a reference point in the treatment volume from the readings of the dose monitoring system.

(c) Each dose monitoring system will be capable of independently monitoring, interrupting, and terminating irradiation.

(d) For new equipment, the design of the dose monitoring systems will assure that—

1. The malfunctioning of one system will not affect the correct functioning of the second system.

2. The failure of any element common to both systems that could affect the correct function of both systems will terminate irradiation.

(e) Each dose monitoring system will have a legible display at the treatment control panel. For new equipment, each display will—

1. Maintain a reading until intentionally reset to zero.

2. Have only one scale and no scale multiplying factors.

3. Be designed so that the increasing dose is displayed by increasing numbers and that, in the event of an overdosage of radiation, the absorbed dose may be accurately determined.

(f) In the event of power failure, the dose monitoring information (required in *(e)1* through *(e)3* above) displayed at the control panel at the time of failure will be retrievable in at least one system for a 20-minute period of time.

g. Beam symmetry.

(1) In new equipment inherently capable of producing primary beams with asymmetry exceeding 5 percent, the asymmetry of the radiation beam in two orthogonal directions will be monitored before the beam passes through the beam-limiting device.

(2) If the difference in dose rate between one region and another region symmetrically displaced from the central axis of the beam exceeds 5 percent of the central axis dose rate, facilities will be provided so that—

(a) Indication of this condition is made at the control panel.

(b) Irradiation is terminated if this difference exceeds 10 percent.

h. Selection and display of dose monitor units (MU).

(1) Irradiation will not be possible until a selection of a number of dose MU is made at the treatment control panel.

(2) The preselected number of dose MU will be displayed at the treatment control panel until reset manually for the next irradiation.

(3) After termination of irradiation, it will be necessary to reset the dosimeter display to zero before subsequent treatment can be initiated.

(4) For new equipment, after termination of irradiation, it will be necessary to manually reset the preselected dose MU before irradiation can be initiated.

i. Termination of irradiation by the dose monitoring system(s) during stationary beam therapy.

(1) Each primary system will terminate irradiation when the preselected number of dose MU is detected by the system.

(2) If original design of the equipment included a second dose monitoring system, that system will be capable of terminating irradiation when not more than 15 percent or 40 dose MU above the preselected number of dose MU set at the control panel are detected by the second dose monitoring system.

(3) For new equipment, a second dose monitoring system will be present. That system will be capable of terminating irradiation when not more than 10 percent or 35 dose MU above the preselected number of dose MU set at the control panel are detected by the second dose monitoring system.

(4) For new equipment, an indicator on the control panel will show which dose monitoring system has terminated irradiation.

j. Interruption switches. It will be possible to interrupt irradiation and equipment movements at any time from the operator's position at the treatment control panel. Following interruption, the operator will be able to restart irradiation without any reselection of operating conditions. If any change is made of a preselected value during an interruption, irradiation and equipment movements will be automatically terminated.

k. Termination switches. The operator will be able to terminate irradiation and equipment movements, or go from an interruption condition to termination conditions, at any time from his or her position at the treatment control panel.

l. Timer.

(1) A timer with a display will be provided at the treatment control panel. The timer will—

(a) Have a preset time selector and an elapsed time indicator.

(b) Be a cumulative timer that activates with the production of radiation and retains its reading after irradiation is interrupted or terminated. After irradiation is terminated and before irradiation can be reinitiated, it will be necessary to reset the elapsed time indicator to zero.

(c) Terminate irradiation when a preselected time has elapsed, if the dose monitoring systems have not previously terminated irradiation.

(2) For new equipment, after termination of irradiation and before irradiation can be reinitiated, it will be necessary to manually reset the preset time selector.

m. Selection of radiation type. Equipment capable of both x-ray therapy and electron therapy will meet the following additional requirements:

(1) Irradiation will not be possible until a selection of radiation type is made at the treatment control panel. The radiation type selected will be displayed at the treatment control panel before and during irradiation.

(2) An interlock system will be provided to—

(a) Ensure that the equipment can emit only the selected radiation type.

(b) Prevent irradiation if any selected operations carried out in the treatment room do not agree with the selected operations carried out at the treatment control panel.

(c) Prevent irradiation with x-rays except to obtain a port film when electron applicators are fitted.

(d) Prevent irradiation with electrons when accessories specific for x-ray therapy are fitted.

n. Selection of energy. Equipment capable of generating radiation beams of different energies will meet the following requirements:

(1) Irradiation will not be possible until a selection of energy is made at the treatment control panel.

(2) An interlock system will be provided to prevent irradiation if any selected operations carried out in the treatment room do not agree with the selected operations carried out at the treatment control panel.

(3) The nominal energy value selected will be displayed at the treatment control panel before and during irradiation.

(4) For new equipment, an interlock system will be provided to terminate irradiation if the energy of the electrons striking the x-ray target or electron window deviates by more than 20 percent or 3 megaelectron volts (MeV), whichever is smaller, from the selected nominal energy.

o. Selection of stationary beam therapy or moving beam therapy. Equipment capable of both stationary beam therapy and moving beam therapy will meet the following requirements:

(1) Irradiation will not be possible until a selection of stationary beam therapy or moving beam therapy is made at the treatment control

panel.

(2) An interlock system will be provided to—

(a) Ensure that the equipment can operate only in the selected mode.

(b) Prevent irradiation if any selected operations carried out in the treatment room do not agree with the selected operations carried out at the treatment control panel.

(3) The mode of operation will be displayed at the treatment control panel.

(4) For new equipment, an interlock system will be provided to terminate irradiation if movement of the gantry—

(a) Occurs during stationary beam therapy.

(b) Stops during moving beam therapy, unless such stoppage is a preplanned function.

(5) Moving beam therapy will be controlled to obtain the selected relationships between incremental dose MU and incremental angle of movement. For new equipment—

(a) An interlock system will be provided to terminate irradiation if the number of dose MU delivered in any 10 degrees of arc differs by more than 20 percent from the selected value.

(b) Where gantry angle terminates the irradiation in arc therapy, the dose MU will differ by less than 5 percent from the value calculated from the absorbed dose per unit angle relationship.

(6) Where the dose monitor system terminates the irradiation in arc therapy, the termination of irradiation will be as required by *i* above.

p. Absorbed dose rate. For new equipment, a system will be provided from which the absorbed dose rate at a reference point in the treatment volume can be calculated from its readings. In addition—

(1) The dose monitor unit rate will be displayed at the treatment control panel.

(2) If the equipment can deliver, under any conditions, an absorbed dose rate at the normal treatment distance more than twice the maximum value specified by the manufacturer for any machine parameters used, a device will be provided that terminates irradiation when the absorbed dose rate exceeds a value twice the specified maximum. The value at which the irradiation will be terminated will be maintained in a record.

q. Location of virtual source and beam orientation. The location with reference to an accessible point on the radiation head of the following will be determined or obtained from the manufacturer:

(1) The x-ray target or the virtual source of x-rays.

(2) The electron window or the virtual source of electrons if the system has electron beam capabilities.

r. System checking facilities. Capabilities will be provided so that all radiation safety interlocks can be checked for correct operation. When preselection of any of the operating conditions requires action in the treatment room and at the treatment control panel, selection at one location will not give a display at the other location until the requisite selected operations in both locations are complete.

8–9. Calibrations and spot checks

a. Calibrations.

(1) The calibration of therapeutic x-ray systems will be performed—

(a) Per the requirements of a calibration protocol that is written according to the recommendations of AAPM Task Group Reports No. 21 and 25.

(b) By or under the direct supervision of a qualified medical physicist who is present at the facility during the calibration.

(c) At the following intervals:

1. Before the system is first used for irradiation of a patient and at intervals not to exceed 12 months thereafter.

2. After any change which might significantly alter the calibration, spatial distribution, or other characteristics of the therapy beam.

3. When a spot-check measurement indicates that the output differs by more than 5 percent from the value obtained during the last full calibration.

(d) Using a dosimetry system that has been calibrated by the National Institute of Standards and Technology or by a calibration laboratory accredited by the AAPM. The calibration must have been performed within the previous 2 years and after any servicing that may have affected the calibration.

(2) The calibration of the therapy beam will include, but not be limited to, the following determinations:

(a) Verification that the equipment is operating in compliance with the design specifications concerning the light localizer, side light, and back-pointer alignment with the isocenter, when applicable; variation in the axis of rotation for the table, gantry, and jaw system; and beam flatness and symmetry at the specified depth.

(b) The absorbed dose rate at various depths of water for the range of field sizes used, for each effective energy. This will verify the accuracy of the dosimetry of all therapy procedures performed with that therapy beam.

(c) The uniformity of the radiation field and any dependency on the direction of the primary beam.

(d) Verification that existing depth-dose data and isodose charts applicable to the specific machine continue to be valid or are updated to existing machine conditions.

(e) Verification of transmission and electron buildup factors for all accessories, such as wedges, shadow trays, and compensators.

(3) Maintain records of calibration measurements and dosimetry system calibrations for 5 years after completion of the full calibration.

(4) Keep, in the area of the control panel, a copy of the latest calibration performed.

b. Periodic spot checks.

(1) Weekly output spot checks on each LINAC will include determination of—

(a) The coincidence of the radiation field and the field indicated by the light beam localizing device.

(b) Isocenter position indication accuracy.

(c) The output for one typical set of operating conditions measured with the dedicated dosimetry system.

(d) The difference between the measurement made in *c* above and the anticipated output, expressed as a percentage of the anticipated output.

(2) Measurements required by (1) above will be performed according to procedures established by the medical physicist. That individual does not have to actually perform the spot-check measurements.

(3) The medical physicist will review the results of each spot check required by (1) above within 15 days. The medical physicist will notify the RPO once each calendar month, in writing, of the results of each spot check performed during the previous month. The RPO will keep a copy of each written notification for 3 years.

(4) Weekly safety spot checks of each LINAC facility will be performed that assure proper operation of—

(a) Electrical interlocks at each LINAC room entrance.

(b) Electrical or mechanical stops installed for the purpose of limiting use of the primary beam of radiation (restriction of target housing angulation or elevation, carriage or stand travel, and operation of the beam on-off mechanism).

(c) Beam condition indicator devices on the LINAC, on the control console, and in the facility.

(d) Viewing systems.

(e) Treatment room doors from inside and outside the treatment room.

(f) Electrically assisted treatment room doors with the LINAC electrical power turned off.

(5) Any system identified in (4) above that is not operating properly will be repaired promptly. The LINAC will not be operated following a door interlock malfunction until the interlock system has been repaired.

(6) Retain a record of each spot check required by (1) and (4) above for 3 years. Each type of spot-check record must include the signature of the individual who performs the spot check.

(7) The weekly output spot-check record must include—

(a) Date of the spot check.

(b) Manufacturer's name, model number, and serial number for the LINAC.

(c) Manufacturer's name, model number, and serial number of the instrument used to measure the output of the LINAC.

(d) Determination of the coincidence of the radiation field and the field indicated by the light beam localizing device.

(e) Isocenter position indication accuracy.

(f) Difference between the anticipated output and the measured output.

(8) The weekly safety spot-check record must include—

(a) Date of the spot check.

(b) Notations indicating the operability of—

1. Each entrance door electrical interlock.

2. Each electrical or mechanical stop.

3. Each beam condition indicator device.

4. The viewing system.

5. Doors.

8–10. Facility design

a. The recommendations for facility design and shielding contained in NCRP Reports No. 49, 79, and 102 or current updates to these reports will be followed. Specifically, the following requirements will be met.

(1) *Protective barriers.* All protective barriers will be fixed except for entrance doors or beam interceptors.

(2) *Control panel.* The control panel will be located outside the treatment room.

(3) *Viewing systems.*

(a) Windows, mirrors, closed-circuit television, or an equivalent system will be provided to permit continuous observation of the patient during irradiation. These viewing systems will be located so that the operator may observe the patient from the control panel.

(b) When the primary viewing system is by electronic means, an alternate viewing system, which may be electronic, will be available for use in the event of failure of the primary viewing system.

(4) *Aural communications.* Provision will be made for two-way aural communication between

the patient and the operator at the control panel. However, where excessive noise levels or treatment requirements makes aural communication impractical, other methods of communication will be used.

(5) *Room entrances.* Treatment room entrances will be provided with warning lights in readily observable positions near the outside of all access doors to indicate when the primary beam is "on."

(6) *Entrance interlocks.* Interlocks will be provided such that all entrance doors must be closed before treatment can be initiated or continued. If the radiation beam is interrupted by any door opening, it will not be possible to restore the machine to operation without closing the door and reinitiating irradiation by manual action at the control panel.

b. A qualified expert will perform a shielding evaluation per chapter 4, before construction begins.

c. The activity will notify the RPO before—

(1) Making any changes in the treatment room shielding.

(2) Making permanent changes in the treatment room door interlocks.

(3) Relocating the LINAC.

8–11. Facility surveys

a. Prior to the use of a facility for the irradiation of patients, either a qualified expert or personnel under his or her supervision will perform a survey—

(1) On all new facilities, and existing facilities not previously surveyed, to ensure compliance with Federal and Army regulations.

(2) After any change in the facility or equipment that might cause a significant increase in radiation hazard.

b. The above survey will include neutron measurements if the accelerator exceeds energies of 10 megavolt (MV).

c. The surveyor will provide a written report of the survey to the chief, radiation oncology department, and the RPO. The report will indicate all instances where the installation, in the opinion of the qualified expert, is in violation of applicable regulations.

d. Within 30 days of receipt of the survey report, the RPO will forward a copy of the survey report to the MEDCOM radiation protection staff officer.

Table 8–1. Maximum energy values and x-ray absorbed dose fractions

Maximum energy of electron beam in MeV	X-ray absorbed dose as a fraction of maximum absorbed dose
1	0.03
15	0.05
35	0.10
50	0.20

Legend: MeV = megaelectron volts

Table 8–2. Maximum photon energy values and absorbed dose fractions

Maximum photon energy in MeV	Absorbed dose at the surface as a fraction of the maximum absorbed dose
1	0.80
2	0.70
5	0.60
15	0.50
35	0.40
50	0.20

CHAPTER 9

QUALITY ASSURANCE/QUALITY CONTROL IN RADIATION THERAPY

Section I. INTRODUCTION

9–1. General

The administration of ionizing radiation for the purpose of radiation therapy can be a complex procedure involving a team of medical professionals that consists of the prescribing physician (radiation oncologist), the medical physicist, the medical dosimetrist, and the radiation therapist. The complexity of this task requires clear communication and constant attention to detail during the treatment process.

a. The safe delivery of the radiation dose to the patient involves both medical and technical decisions.

(1) The radiation oncologist is responsible for the medical management of patients undergoing radiation therapy.

(2) The medical physicist works under the medical direction of the radiation oncologist and has responsibility for the technical aspects of patient treatment.

(3) Technical aspects include physical characterization of treatment beams, patient dosimetry (or supervision of medical dosimetrist), acceptance testing and commissioning of equipment used in patient treatment, establishing and maintaining a QAP, establishing and maintaining (or supervising the maintenance of) quantitative QC programs. Recommendations on radiation therapy equipment QA and QC are available in AAPM Reports 46, 47, 48, 56, and 67 or subsequent updates.

b. Both the prescribing physician and the medical physicist will be credentialed by the medical institution for privileges to perform their particular duties in radiation therapy. The RCC will review and accept the physician's credentials and the medical physicist's training and experience to ensure they meet the minimum criteria.

(1) The prescribing physician will meet the training and experience requirements of paragraph 1-6*f* of this bulletin.

(2) The medical physicist will meet the training and experience requirements of paragraph 1-6*g* of this bulletin.

9–2. Quality assurance program

a. A complete QAP at an MTF is an ongoing process to—

(1) Monitor and objectively and systematically evaluate the access to, and the quality and appropriateness of, patient care.

(2) Identify problems in care and performance, and implement solutions to those problems.

b. All installations with therapeutic x-ray systems will have a written QAP that contains at least the following features:

(1) Daily, monthly, and annual QC procedures that provide an optimal likelihood of accurate and consistent dose being delivered to the patient in radiation therapy. For LINACs these procedures will be, as a minimum, those specified in table II of AAPM Report No. 46.

(2) Radiation protection procedures required to promote safe and reliable use for personnel and patients.

(3) Corrective action criteria, where appropriate.

c. The prescribing physician will ensure that each radiation therapy dose administration is according to his or her prescription by—

(1) Signing the prescription prior to the administration of any therapeutic radiation dose. An exception to this is permitted if a patient's medical condition is such that a delay in treatment would be detrimental to the patient's health. In this case, a verbal order will suffice, provided the prescribing physician signs and dates a written prescription within 24 hours.

(2) Verifying that the patient is the individual named in the prescription prior to each administration.

(3) Checking and signing the dose plan prior to a patient treatment, if it was generated using a treatment planning computer system.

d. A person authorized to calculate the exposure time (that is, the medical dosimetrist or the medical physicist) will perform such calculations. Within 48 hours after the first treatment, a second authorized individual will check the first individual's calculations and initial and date the check. If the number of fractions prescribed is five or less, perform the second check within 24 hours. If the exposure time is 500 MU or greater for a given fraction, perform the second check before the first fraction is given. In

the case of an emergency treatment given during other than normal working hours, check the treatment time on the first working day following the emergency treatment.

e. If there is any question or doubt as to what is to be done, the radiation therapist will not treat the patient until the prescribing physician or medical physicist provides clarification.

f. Before administering a radiation therapy treatment, the radiation therapist will verify the daily dose prescribed and the treatment site. The person administering the radiation dose should—

(1) In particular, confirm the treatment site and the dose per fraction to verify agreement with the prescription and plan of treatment.

(2) Verify all other written instructions.

g. After the administration of a treatment, the radiation therapist will annotate the treatment, per clinic policy, in the patient's chart. Include the following—

(1) Date of treatment.

(2) Monitor units delivered or treatment time delivered.

(3) Fraction number.

(4) Elapsed day of treatment. First treatment is on day 0.

(5) Dose administered per field.

(6) Total daily dose.

(7) Cumulative dose.

(8) Dose to any interest point as specified by the physician.

(9) Signature or initials of the technologist.

h. The medical physicist or his or her designate will check patient charts on a weekly basis to ensure patient treatments are conducted as prescribed.

i. The physician/chief, radiation therapy service, with the support of authorized individuals, will identify, evaluate, and take appropriate action on any unintended deviation from the prescription.

j. The medical physicist will establish procedures to have a physical measurement of the radiation output made under applicable conditions prior to administering the first fractional dose, if the patient's plan of treatment includes field sizes or treatment distances that fall outside the range of those measured in the most recent full calibration or transmission factors for beam modifying devices not measured in the most recent full calibration.

k. The chief, radiation oncology, will ensure that—

(1) The other prescribing physicians, the medical physicist, the medical dosimetrist, and the radiation therapists are trained concerning the QAP and the radiation safety program.

(2) The medical physicist and the medical dosimetrist are properly trained in the use of the dose treatment planning computer.

(3) The operators of the therapy systems are properly trained in the use and functions of the system.

(4) A record of the above training, including a description of what the training included, is kept for a period of 3 years.

(5) A list of qualified operators is maintained.

l. At least annually, the medical physicist must perform measurements on each photon and electron beam available to confirm that doses can be delivered to within 5 percent of the prescribed dose.

m. Two years after the initial acceptance and commissioning of a new LINAC and every 5 years thereafter, the medical physicist, in coordination with the chief, radiation therapy service, will perform an external peer review of the radiation therapy dosimetry information used clinically. The review will include—

(1) An evaluation of depth dose, area correction factors, profile information, and wedge transmission factors. This information must be sent to the external peer review contractor prior to a visit.

(2) An interview with the chief, radiation therapy service, to determine that credentialing documentation (for example, certification, continuing education credits, etc.) is current.

(3) An interview with the medical physicist to determine the adequacy and appropriateness of the methodology used (for example, protocols) to make absolute dose calculations and to perform relative dose measurements.

(4) A calibration of the source with spot measurements of dosimetric data to compare with tabulated values in clinical use.

(5) A full report of the external review to the chief, radiation therapy service.

9–3. Equipment quality control program

a. An effective equipment QC program to prevent treatment errors due to machine malfunction is essential for the safe and accurate delivery of radiation for therapeutic purposes. The program should be—

(1) Jointly established and implemented by the radiation oncologists, the medical physicist, the medical dosimetrist, the therapists, and the equipment engineers.

(2) Simple to implement, but sufficiently comprehensive in scope.

b. The basic components for such a program include well defined criteria, adequate instrumentation, qualified personnel, and sufficient documentation. The components should include—

(1) A system for keeping records of all calibration checks, both scheduled and unscheduled, and calibration of dosimetry equipment should be maintained and periodically reviewed for compliance.

(2) Acceptance testing and commissioning for all therapeutic x-ray systems by a qualified medical physicist prior to human use. Acceptance testing and commissioning will be compliant with the recommendations set forth in AAPM Report No. 47 or any subsequent update to this report. Records of the acceptance testing will be kept for the life of the unit.

(3) Procedures for making periodic (at least semi-annually) output checks using a reliable dosimeter (for example, TLD) via a mail service and from a nationally recognized inter-comparison program.

(4) The exposure rate or dose rate of the primary beam and the geometry of the primary beam will be known with reasonable certainty at all times during operation of the radiation therapy equipment for medical purposes.

(5) If, in the opinion of the medical physicist, the results of the checks indicate the malfunction of any system would compromise patient treatment, the activity will lock the control console in the off position and not use the unit except as may be necessary to repair, replace, or check the malfunctioning system.

(6) The medical physicist will review the results of each spot check required and notify the RPO, in writing, of the results of each spot check performed during the previous month. The RPO will keep a copy of each written notification for 3 years.

9–4. Safety instructions

The activity will place safety instructions in the proximity of the LINAC console. To satisfy this requirement, these instructions must inform the operator of—

a. The procedures to follow—

(1) To ensure that only the patient is in the treatment room before turning the primary beam of radiation on to begin a treatment.

(2) After a door interlock interruption.

b. The names and telephone numbers of the prescribing physicians, the medical physicist, and RPO to immediately contact if an emergency situation happens.

c. The need to keep both the control panel and the patient under observation.

d. The prescribing physician's responsibility for the operation of all x-ray systems used for radiation therapy, and that he/she will either operate or provide supervisory oversight of such operations.

Section II. MISADMINISTRATION REPORTING REQUIREMENTS

9–5. Misadministrations

A misadministration occurs with the administration of—

a. A therapy radiation dose from a LINAC when errors in the calibration, time of exposure, treatment geometry, or other errors result in any of the following:

(1) A therapy radiation dose to the wrong patient, the wrong treatment site, or the wrong mode of treatment.

(2) The administered total dose differs from the total prescribed dose by more than 20 percent of the total prescribed dose.

b. A therapy radiation dose from a stereotactic radiosurgery unit when errors in the calibration, time of exposure, treatment geometry, or other errors result in any of the following:

(1) A therapy radiation dose to the wrong patient or wrong treatment site.

(2) The administered total dose differs from the total prescribed dose by more than 10 percent.

9–6. Records and reports of misadministrations

a. In the event of a therapy misadministration involving a LINAC—

(1) The activity will notify the MEDCOM staff officer by telephone at DSN 471-6612 or commercial (210) 221-6612 and the Command Judge Advocate.

(2) The prescribing physician will notify the referring physician and the patient or responsible relative or guardian, unless the referring physician agrees to inform the patient or believes, based on medical judgment, that telling the patient or the patient's responsible relative (or guardian) would be harmful to one or the other.

b. The above notifications must be made within 24 hours after the discovery of the misadministration. If the referring physician, patient, or the patient's responsible relative or guardian cannot be reached within 24 hours, the activity will notify them as soon as practicable.

c. The activity is not required to notify the patient or the patient's responsible relative or guardian

without first consulting the referring physician; however, the activity will not delay medical care for the patient because of this unless it is documented to be detrimental to the patient to continue.

d. Within 15 days after initial telephonic notification of a therapy misadministration, the activity will send—

(1) A written report to Commander, U.S. Army Medical Command, ATTN: MCPO-SA, 2050 Worth Road, Fort Sam Houston, Texas 78234-6025. Commander, MEDCOM, will provide a copy of this report, with restricted patient information obscured or deleted (see para *e* below), within 5 days to HQDA (DACS-SF), Washington, DC 20310-0200.

(2) A copy of the report to the referring physician and the patient or the patient's responsible relative (or guardian) if either was previously notified.

e. The written report must not include the patient's name or other information that could lead to identification of the patient; however, it must include—

(1) The referring physician's name.

(2) A brief description of the event.

(3) The effect on the patient.

(4) The action taken to prevent recurrence.

(5) Whether the activity informed the patient or the patient's responsible relative (or guardian), and if not, why.

f. Each activity will retain a record of each misadministration for 10 years. The record must contain—

(1) The names of all individuals involved in the event (including the physician, allied health personnel, the patient, and the patient's referring physician).

(2) The patient's social security number or identification number, if one has been assigned.

(3) A brief description of the event.

(4) The effect on the patient.

(5) The action taken, if any, to prevent recurrence.

g. Aside from the notification requirement, nothing in this paragraph affects any rights or duties of the activity and physicians in relation to each other, patients, or responsible relatives (or guardian).

CHAPTER 10
RECORDS AND REPORTING REQUIREMENTS

10–1. Scope

a. This chapter provides records and reporting requirements for diagnostic x-ray systems under the jurisdiction of DA.

b. Due to legal implications relating to exposure of humans to ionizing radiation, accurate records are necessary to verify that all assemblies, services, adjustments, and calibrations of diagnostic and therapy x-ray equipment have been performed in a manner that minimizes operator and patient exposure.

10–2. Equipment log requirements

a. Medical activities will—

(1) Initiate DA Form 2409 (Equipment Maintenance Log (Consolidated)), using manual procedures, upon receipt of any diagnostic x-ray system.

(2) Prepare and dispose of the automated maintenance record operating under an automated system such as AMEDDPAS, for x-ray systems per the applicable automated system manual.

(3) Take the following actions whenever radiation protection surveys are performed:

(a) Activities operating under a manual system will enter the radiation protection survey number in section B, DA Form 2409.

(b) Activities operating under an automated system will enter the radiation protection survey number per AMEDDPAS procedures currently in effect.

(4) Ensure a DA Form 2407 or automated maintenance request is—

(a) Completed and disposed of per TB 38-750-2 or applicable instructions for automated systems.

(b) Initiated for all services performed on diagnostic x-ray equipment, to include commercial services.

(5) Verify that the DA Form 2407 or DD Form 1348-1A (Issue Release/Receipt Document) submitted to medical depots for x-ray equipment is annotated with one of the following statements:

"CERTIFIED COMPONENT-MUST BE CERTIFIED."
or
"UNCERTIFIED COMPONENT-DO NOT CERTIFY."

b. When using contractual services, the contract will include a requirement for the contractor to furnish the MER activity with a—

(1) Detailed itemization of repairs each time repairs are made.

(2) Form FDA 2579, when applicable, so that the necessary information can be recorded on the DA Form 2407 and subsequently posted to DA Form 2409 or automated equipment record.

10–3. Submission of Form FDA 2579

a. Federal law requires all assemblers who install certified x-ray systems or components to file a report of such assembly per the requirements set forth in 21 CFR 1020.30(d). Uncertified x-ray systems or components do not require submission of Form FDA 2579.

b. When the assembly is performed—

(1) Within continental United States by a contractor, the contractor's representative who had direct supervisory responsibility for the assembly prepares the Form FDA 2579.

(2) OCONUS, civilian contractors are not bound to prepare or submit Form FDA 2579 for the assembly of any x-ray component. In this situation, the senior MER supervising the assembly prepares and forwards Form FDA 2579.

c. TOE organizations by nature of mobility, training requirement, or mission are not required to submit Form FDA 2579 under the following conditions:

(1) In time of war, police action, national emergency, or other declared emergency.

(2) During the initial assembly in a unit when issued under an approved fielding plan.

(3) During relocation of the organization and equipment from one area to another (that is, home station to training site for mission requirements).

d. Subsequent unpacking, setup, and tear down of x-ray equipment during the exercises in *d* above does not constitute "assembly" as defined by 21 CFR; therefore, the Form FDA 2579 should not be submitted.

10–4. Retention and disposition of Form FDA 2579

a. Chief, MER activity, will—

(1) Retain the pink (purchaser's) copy of every Form FDA 2579 originated for the medical activity until each specified component identified on the

form is salvaged, transferred, or installed on another x-ray system.

(2) Annotate disposition of each specified component on the form.

(3) Forward the white and yellow copies to the director, CDRH, within 15 days after assembly or reassembly of any certified x-ray system or component.

(4) Initiate a diagnostic medical and dental x-ray system and specific component file (that is, file 738-750i per AR 25-400-2) for each certified x-ray system.

(5) Retain the file for the life of the x-ray system. See AR 25-400-2 for disposition instructions.

b. When assembly or installation is performed by DA personnel (military or civilian)—

(1) Maintenance managers will retain the pink (purchaser's) copy in the individual x-ray file (738-750i) and forward the white and yellow copies to the director, CDRH, within 15 days following completion of assembly.

(2) The assembler will retain the blue copy for 5 years.

c. When the assembly or installation of certified components is accomplished by other than DA personnel—

(1) The assembler furnishes the pink (purchaser's) copy of the chief, MER activity, for inclusion in the permanent individual x-ray file (738-750i).

(2) The assembler forwards the white copy to the director, CDRH, and the yellow copy to the appropriate State agency.

d. When a certified x-ray system or component is laterally transferred to another activity—

(1) The chief, MER, of the losing activity will ensure that the x-ray system's file (738-750i) accompanies the x-ray system upon transfer.

(2) The chief, MER, of the gaining activity will initiate a Form FDA 2579 and comply with *a* above. If the reassembly is performed by other than DA personnel, they must comply with *b* above.

e. When a certified x-ray system is disposed of to DRMO, the chief, MER activity, is not required to submit a report of disassembly; however, he/she will include a copy of the document DD Form 1348-1A transferring the item to DRMO in the individual x-ray systems permanent file (738-750i). The document file will be retained in the central filing area for a period of 5 years and then destroyed.

f. DA assemblers assigned to a tables of distribution and allowances U.S. Army medical center (MEDCEN) or U.S. Army Medical department activity (MEDDAC) who assemble x-ray systems or components belonging to other MACOMs (that is, TOE units and military entrance processing stations) will—

(1) Submit Form FDA 2579, white and yellow copies, to the director, CDRH.

(2) Furnish the pink (purchaser's) copy to the unit owning the x-ray system or component.

(3) Retain the blue (assembler's) copy.

g. When assembly or installation is performed by DA or associated contractor personnel under an approved fielding plan to field medical units, they will submit the initial Form FDA 2579 to the director, CDRH, for disposition and retention as required. The subsequent assembly or installation during issue to a unit will not constitute "assembly" as defined by 21 CFR.

10–5. Supply of Form FDA 2579

FDA 2579 forms are available, free of charge, from Forms and Publications Distribution Center (HFZ-332), U.S. Public Health Service, 5600 Fishers Lane, Rockville, MD 20857.

10–6. Actions required

When a certified x-ray system is installed and not previously reported, maintenance managers will—

a. Review the permanent file (738-750i) pertaining to the certified x-ray system to determine if a Form FDA 2579 was submitted when initially installed or assembled.

(1) If no form is on file, the maintenance managers will make every effort to locate the form by contacting the manufacturer or vendor; USAMMA's MMOD; and the MACOM's maintenance branch.

(2) If the form cannot be located, the maintenance managers will complete a new Form FDA 2579, including the following information:

(a) Item 3e (Date of Assembly) - Use "date put in service" as reflected on the AMEDDPAS Repetitive Maintenance Report or the manual record, DA Form 2409.

(b) Item 5 (*) - Leave blank.

(c) Item 6 (Comments) - Include the statement "Form FDA 2579 for initial assembly cannot be located. This form initiated on date."

(d) Comment section - Authenticate the form by having the senior maintenance manager place his or her signature in this block.

b. Upon completion of the above, follow the disposition instructions in paragraph 10-4.

10–7. Calibration and survey records

a. The MER activity performing the calibration will use DD Form 2164 to prepare records of calibration or verification of all diagnostic x-ray equip-

ment used on human patients in the following manner:

(1) Attach a separate sheet of paper (addendum) to the DD Form 2164 to indicate the manufacturer, model, serial number, and date of calibration expiration of all items of TMDE used to perform the calibration and to accommodate automated output data from noninvasive systems or other tests that are unique to a particular system.

(2) Maintain DD Form 2164 in file 738-750i for 1 year pending completion of the next x-ray calibration.

(3) Use either invasive or noninvasive type TMDE equipment to perform x-ray calibration. In the event of a difference in measured values, use the invasive value.

b. Contracts for scheduled calibration of x-ray equipment will include provisions to ensure that a DD Form 2164 is completed by the contractor for inclusion in file 738-750i.

c. The MER activity of the supporting MEDCEN or MEDDAC having jurisdiction over the x-ray system will maintain the following items:

(1) The initial acceptance inspection report to determine compliance with manufacturer's stated specifications.

(2) All Forms FDA 2579 completed during the life of the x-ray system.

(3) Latest copy of DD Form 2164 pertaining to x-ray calibration.

(4) Copy of all forms generated for x-ray systems disposed of to DRMO.

(5) Copy of the initial radiation protection survey and the most recent survey performed by the qualified expert to ensure compliance with this bulletin and 21 CFR, chapter 1, subchapter J.

(6) Copy of the DA Form 2409 or automated maintenance record reflecting scheduled and unscheduled services performed.

APPENDIX A
REFERENCES

A–1. Army publications

AR 10-5	Organizations and Functions, Headquarters, Department of the Army
AR 10-43	United States Army Health Services Command
AR 10-87	Major Army Commands in the Continental United States
AR 11-9	The Army Radiation Safety Program
AR 25-400-2	The Modern Army Recordkeeping System (MARKS)
AR 40-3	Medical, Dental, and Veterinary Care
AR 40-5	Preventive Medicine
AR 40-61	Medical Logistics Policies and Procedures
AR 40-66	Medical Record Administration and Health Care Documentation
AR 40-68	Quality Assurance Administration
AR 40-400	Patient Administration
AR 310-25	Dictionary of United States Army Terms
AR 385-40	Accident Reporting and Records
AR 725-50	Requisition, Receipt, and Issue System
AR 750-43	Army Test, Measurement, and Diagnostic Equipment Program
DA Pam 40-18/DLAI 1000.30	Personnel Dosimetry Guidance and Dose Recording Procedures for Personnel Occupationally Exposed to Ionizing Radiation
DA Pam 611-21	Military Occupational Classification and Structure
DA Pam 738-750	Functional Users Manual for the Army Maintenance Management System (TAMMS)
FM 100-14	Risk Management
SB 8-75-MEDCASE	Army Medical Department Supply Information
TB 38-750-2	Maintenance Management Procedures for Medical Equipment
TB 43-180	Calibration and Repair Requirements for the Maintenance of Army Materiel

TB 750-25	Maintenance of Supplies and Equipment: Army Test, Measurement and Diagnostic (TMDE) Calibration and Repair Support (C&RS) Program
TB MED 1	Storage, Preservation, Packaging, Packing, Maintenance, and Surveillance of Materiel–Medical Activities
TB MED 7	Maintenance Expenditure Limits for Medical Materiel
TB MED 524	Control of Hazards to Health from Laser Radiation
TB MED 525	Control of Hazards to Health from Ionizing Radiation Used by the Army Medical Department
TC 8-20-1	Dental Specialist
TM 5-805-12	X-Ray Shielding

A–2. Other publications

AAPM Report No. 1	Phantoms for Performance Evaluation and Quality Assurance of CT Scanners. (AAPMs may be obtained from AAPM Headquarters, One Physics Ellipse, College Park, MD 20704-3846.)
AAPM Report No. 4	Basic Quality Control in Diagnostic Radiology
AAPM Report No. 21	Specification of Brachytherapy Source Strength
AAPM Report No. 25	Protocols for the Radiation Safety Surveys of Diagnostic Radiological Equipment
AAPM Report No. 31	Standardized Methods for Measuring Diagnostic X-Ray Exposures
AAPM Report No. 32	Clinical Electron Beam Dosimetry
AAPM Report No. 35	Recommendations on Performance Characteristics of Diagnostic Exposure Meters
AAPM Report No. 39	Specification and Acceptance Testing of Computed Tomography Scanners
AAPM Report No. 40	Radiolabeled Antibody Tumor Dosimetry
AAPM Report No. 45	Management of Radiation Oncology Patients with Implanted Cardiac Pacemakers
AAPM Report No. 46	Comprehensive QA for Radiation Oncology
AAPM Report No. 47	AAPM Code of Practice for Radiotherapy Linear Accelerators
AAPM Report No. 51	Dosimetry of Interstitial Brachytherapy Sources
AAPM Report No. 56	Medical Accelerator Safety Considerations Report of AAPM Radiation Therapy

AAPM Report No. 67	Protocol for Clinical Reference Dosimetry of High Energy Photons and Electron Beams
ANSI/ADA 26-1991	Dental X-ray Equipment. (This ANSI publication may be obtained from Global Engineering Documents, Customer Support A105, 15 Inverness Way, Englewood, CO 80112.)
CEGS-13090	X-Ray Shielding
CRCPD Publication 89-3	Nationwide Evaluation of X-Ray Trends (NEXT), Tabulation and Graphical Summary of Surveys 1984 through 1987. (This CRCPD publication may be obtained from CRCPD, 205 Capital Ave., Frankfort, KY 40601.)
DOD 4160.21-M	Defense Materiel Disposition Manual
HHS Publication FDA 91-8203	Suggested State Regulations for Control of Radiation, Vol. I (Ionizing Radiation)
HHS Publication FDA 83-8218	A Basic Quality Assurance Program for Small Diagnostic Radiology Facilities
ICRP 33	Protection Against Ionizing Radiation from External Sources Used in Medicine. (ICRP publications may be obtained from Elsevier Science, 655 Avenue of the Americas, New York, NY 10010-5107.)
ICRP 34	Protection of the Patient in Diagnostic Radiology
ICRP 51	Data for Use in Protection Against External Radiation
IEC 60336	X-Ray Tube Assemblies for Medical Diagnosis - Characteristics of Focal Spots. (International Electrotechnical Commission (IEC) publications may be obtained from CSSINFO, 300 Miller Avenue, Ann Arbor, MI 48103.)
IEC 60522	Determination of the Permanent Filtration of X-ray Tube Assemblies
IEC 60601-1-3	Medical electrical equipment - Part 1: General requirements for safety - 3. Collateral standard: General requirements for radiation protection in diagnostic X-ray equipment
IEC 60601-2-8	Medical electrical equipment - Part 2: Particular Requirements for the safety of therapeutic X-ray equipment operating in the range 10 kV to 1 MV
IEC 60601-2-32	Medical electrical equipment - Part 2: Particular requirements for the safety of associated equipment of X-ray equipment
IEC 61267	Medical diagnostic X-ray equipment - Radiation conditions for use in the determination of characteristics
MIL-HDBK 1191	DOD Medical Military Construction Program, Facilities Design and Construction Criteria

NCRP Report No. 35	Dental X-Ray Protection. (NCRPs may be obtained from NCRP Publications, 7910 Woodmont Ave., Suite 800, Bethesda, MD 20814-3095.)
NCRP Report No. 36	Radiation Protection in Veterinary Medicine
NCRP Report No. 49	Structural Shielding Design and Evaluation for Medical Use of X-Rays and Gamma Rays of Energies Up to 10 MeV
NCRP Report No. 54	Medical Radiation Exposure of Pregnant and Potentially Pregnant Women
NCRP Report No. 68	Radiation Protection in Pediatric Radiology
NCRP Report No. 79	Neutron Contamination from Medical Electron Accelerators
NCRP Report No. 88	Radiation Alarms and Access Control Systems
NCRP Report No. 99	Quality Assurance in Diagnostic Imaging
NCRP Report No. 100	Exposure of the U. S. Population from Diagnostic Medical Radiation
NCRP Report No. 102	Medical X-Ray, Electron Beam and Gamma-Ray Protection for Energies Up to 50 MeV (Equipment Design, Performance and Use)
NCRP Report No. 105	Radiation Protection for Medical and Allied Health Personnel
NCRP Report No. 107	Implementation of the Principle of As Low As Reasonably Achievable (ALARA) for Medical and Dental Personnel
NCRP Report No. 112	Calibration of Survey Instruments Used in Radiation Protection for the Assessment of Ionizing Radiation Fields and Radioactive Surface Contamination
NEMA Standard No. XR5-1992	Measurement of Dimensions and Properties of Focal Spots of Diagnostic X-Ray Tubes. (National Electrical Manufacturer's Association (NEMA) standards may be obtained from CSSINFO, 300 Miller Avenue, Ann Arbor, MI 48103.)
NEMA Standard No. XR7-1995	High Voltage X-Ray Cables and Receptacles
NEMA Standard No. XR8-1979 (R1994)	Test Methods for Diagnostic X-Ray Machines for Use During Initial Installation
NFPA Standard No. 70	National Electric Code. (NFPA standards may be obtained from CSSINFO, 300 Miller Avenue, Ann Arbor, MI 48103.)
NFPA Standard No. 99	Health Care Facilities
UL Standard No. 187	X-Ray Equipment. (This UL standard may be obtained from CSSINFO, 300 Miller Avenue, Ann Arbor, MI 48103.)
10 CFR 20	Standards for Protection Against Radiation
21 CFR, chapter 1, subchapter J	Radiological Health

21 CFR 1002	Records and Reports
21 CFR 1010	Performance Standards for Electronic Products: General
21 CFR 1020	Performance Standards for Ionizing Radiation Emitting Products
43 FR 4377	Radiation Protection Guidance to Federal Agencies For Diagnostic X-Rays
Unnumbered	Architectural and Engineering Instructions, Medical Design Standards. (This publication may be obtained from USACE Publication Depot, ATTN: CEIM-IM-PD, 2803 52nd Ave., Hyattsville, MD 20781-1102.)
Unnumbered	Diagnostic X-ray Survey Procedure Manual. (This manual may be obtained from USACHPPM, ATTN: MCHB-TS-OMH, 5158 Blackhawk Road, APG, MD 21010-5403.)
Unnumbered	Joint Commission on Accreditation of Healthcare Organizations (JCAHO), Comprehensive Accreditation Manual for Hospitals: The Official Handbook. (The current edition of this publication may be obtained from JCAHO, 875 N. Michigan Ave., Chicago, IL 60611.)
Unnumbered	World Health Organization (WHO), Manual on Radiation Protection in Hospitals and General Practice, Vol. 3, X-Ray Diagnosis. (WHO manuals may be obtained from WHO Publication Center, 49 Sheridan Ave., Albany, NY 12210.)
Unnumbered	WHO, Manual on Radiation Protection in Hospitals and General Practice, Vol. 4, Radiation Protection in Dentistry

A–3. Referenced Forms

Except where otherwise indicated below, the following forms are available on the Army Electronic Library (AEL) CD-ROM (EM0001) and the USAPA web site—www.usapa.army.mil.

DD forms are available from the OSD web site—http://web1/whs.osd.mil/icdhome/cdhome.htm.

DA Form 2407	Maintenance Request. (Available through normal forms supply channels.)
DA Form 2409	Equipment Maintenance Log (Consolidated). (Available through normal forms supply channels.)
DD Form 1348-1A	Issue Release/Receipt Document
DD Form 2163	Medical Equipment Verification/Certification Worksheet. (Available through normal forms supply channels.)
DD Form 2164	X-Ray Verification/Certification Worksheet. (Available through normal forms supply channels.)

Form FDA 2579	Report of Assembly of a Diagnostic X-Ray System. (Available at no cost from Forms and Publication Distribution Center (HFZ–332), U. S. Public Health Service, 5600 Fishers Lane, Rockville, MD 20857)
SF 364	Report of Discrepancy
SF 368	Product Quality Deficiency Report
SF 380	Reporting and Processing Medical Materiel Complaints/Quality Improvement Report. (Available through normal forms supply channels.)

APPENDIX B

PATIENT EQUIVALENT PHANTOM SPECIFICATIONS

B–1. General

a. The CDRH has developed acrylic and aluminum phantoms; however, hospitals may choose to purchase phantoms from another organization or have them manufactured. If hospitals choose this option, their phantoms must meet the CDRH phantom specifications provided below or their data will be considered unacceptable. This appendix contains specifications for acceptable phantoms to be used with both manual and AEC radiographic systems, per AAPM Report No. 31.

b. When making measurements, the mode of operation (manual or AEC) used will be the mode used clinically for a selected projection. Because radiographic AEC and fluoroscopic automatic brightness control detectors are energy dependent, measurement of ESE requires the use of patient-equivalent phantoms for useful results. Phantoms must be used between the focal spot and the AEC or automatic brightness control detectors and must cover the active area of the AEC detectors. The ion chamber will not cover the active area of the AEC detectors. The sensitive volume of the probe should be approximately 23 cm or more from the phantom to minimize backscatter whenever possible.

c. For fluoroscopic unit high and low contrast tests, use the holes and meshes test employed by the FDA. Additionally, use a densitometer to determine the optical density of the radiographic films. See chapter 5, paragraph 5-10, for a more detailed explanation of how to execute these tests.

B–2. CDRH chest phantom

The chest phantom consists of 25.4 cm by 25.4 cm pieces of type 1100 alloy aluminum and clear acrylic with a 19 cm air gap. The exact configuration of aluminum, acrylic, and air gap is shown in figure B–1. Clinical testing of the phantom shows that it is equivalent to a 23 cm patient for the PA chest projection.

B–3. CDRH abdomen/lumbar spine phantom

a. The abdomen and lumbar spine phantom consists of—

(1) 25.4 cm by 25.4 cm pieces of clear acrylic 16.95 cm thick in the soft tissue region.

(2) 0.46 cm of aluminum (type 1100 alloy) and 18.95 cm of acrylic for the spinal region.

b. The exact configuration of acrylic and aluminum is shown in figure B–2. Clinical testing of the phantom shows it to be equivalent to a 21 cm patient for the AP abdomen and lumbar spine projections.

B–4. CDRH intraoral dental phantom

The intraoral dental phantom consists of a 7.62 cm clear acrylic body with a 0.95 cm sheet of acrylic on the top disk of the phantom. The dental phantom has a test block with filter slots that is composed of 1.9 cm and 1.27 cm laminated birch plywood and a bracket made of 1.6 cm aluminum. The phantom contains two copper filters of 0.025 cm and 0.051 cm thick. There are four mesh inserts for measuring contrast levels that are made of 0.32 cm disks with mesh sizes of 100, 120, 150 and 200. The center of the phantom contains a human tooth. A step wedge test tool is used with this phantom to measure film fog that consists of 1.27 cm aluminum. The exact configuration of aluminum, acrylic, and other materials is shown in figure B–3.

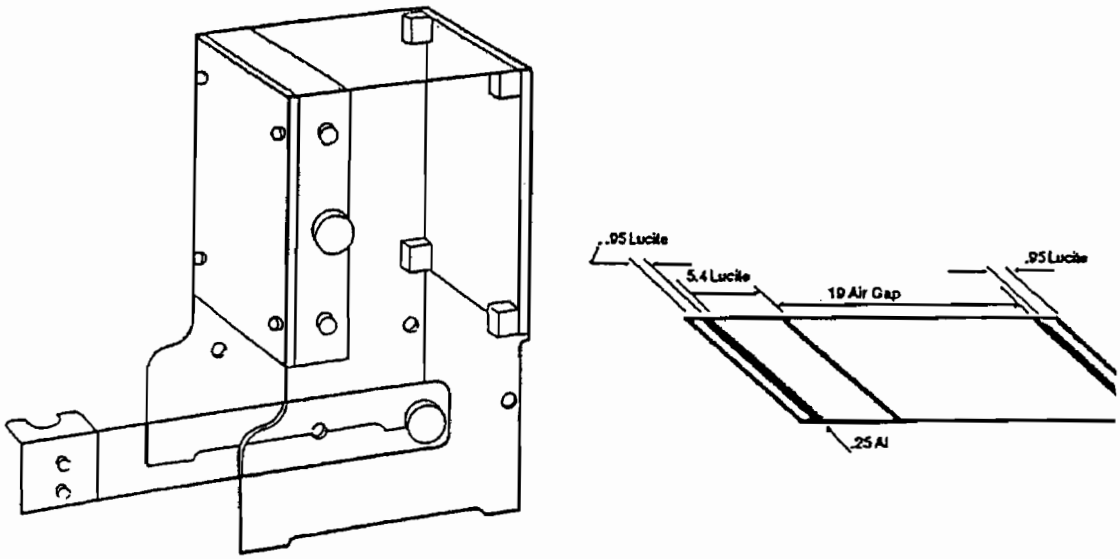

Figure B–1. CDRH patient equivalent acrylic and aluminum standard chest phantom. (All dimensions are in cm)

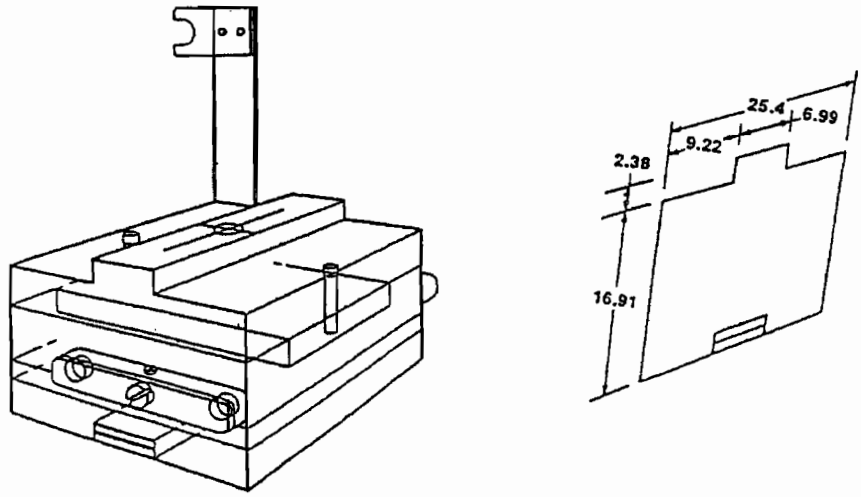

Figure B–2. CDRH patient equivalent acrylic and aluminum standard abdomen and lumbo-sacral phantom. (All dimensions are in cm)

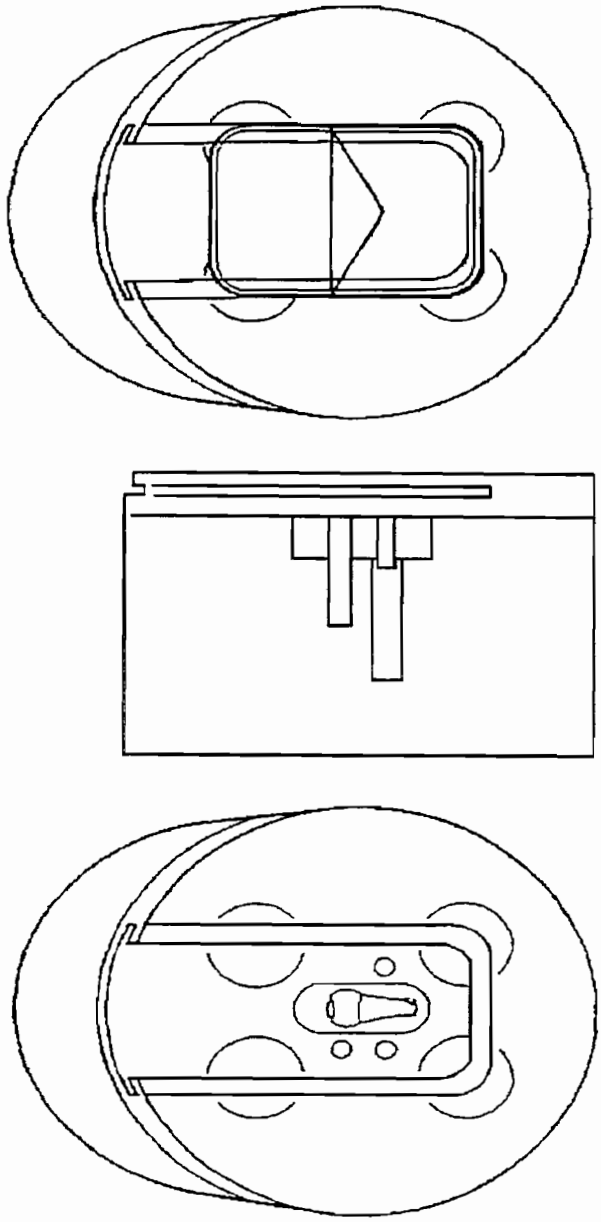

Figure B-3. CDRH patient equivalent acrylic and aluminum standard intraoral dental phantom.

APPENDIX C

SAMPLE QUALITY ASSURANCE MANUAL

C–1. General

A sample medical radiology QA manual for a department using wet processing is shown in figure C–1. The sample manual follows a three-tiered approach (that is, basic plan, annexes, and appendices). Each annex may contain several appendices. The level of detail increases at each level. The appendices are not included in this sample manual due to space constraints and the fact that much of the information in the appendices will be site specific.

C–2. Template

This sample manual is designed only as a template that should be modified to fit the needs and policies of individual facilities prior to being implemented. If you use procedures that differ from those of this manual, they will need to be modified to reflect your procedures. Several sources of information are available to aid the facility in customizing this sample manual. These include HHS Publication FDA 83-8218, NCRP Report No. 99, and this bulletin. Other textbooks and publications are available on the topic of QA and can be used also.

C–3. Computerized medical management systems

Many facilities may have access to a computerized medical management system. In such cases, much of the information contained in these systems will be applicable to the QAP. Facilities should make as much use of existing information systems as possible. This will make the QAP less burdensome and easier to incorporate into existing procedures.

QUALITY ASSURANCE MANUAL

1. Purpose

The purpose of the quality assurance program (QAP) is to maintain a level of equipment performance that assures consistent production of images of diagnostic quality without unnecessary radiation exposure to the patient or the staff.

2. Facility Description

The diagnostic radiology department includes--

a. Two examination rooms. One examination room is equipped with an ABC* radiographic-fluoroscopic unit, the other with a DEF* radiographic unit.

b. A darkroom equipped with a GHI* automatic processor.

c. Patient waiting and dressing rooms, storage facilities.

3. Staff Requirements

The staff includes one radiologist, a chief technologist, and five staff technologists (one of whom is also assigned responsibility for the processor operation). A consulting physicist (you may have a staff physicist or the RPO may fill this function, if qualified) visits annually and is also available for other assistance as described in annexes A and F.

4. Organization of the Quality Assurance Program

a. Responsibility for various aspects of the QAP has been assigned as described in annex A.

b. A retake analysis program was established prior to initiation of the QAP, and it will be continued through the life of the program as an aid in

---

* These sets of alphabetical letters are a generic means of identifying the brand name/manufacturer of a facilities' equipment. Substitute the name of the manufacturer of your equipment in the appropriate places.

Sample

Figure C-1. Sample medical radiology QA manual (page 1 of 23)

evaluating program effectiveness. The retake analysis program is described in annex B.

c. Quality control (QC) monitoring of equipment performance is the heart of the QAP.

(1) The parameters to be monitored, the procedures to be followed, and the frequency of monitoring are described in annex C.

(2) Personnel assigned QA duties are trained in the performance of those duties as described in annex D.

(3) Results obtained from the monitoring are to be recorded on forms that are to be kept in the records binder in the chief technologist's office. Example forms are kept in annex E.

(4) The monitoring results should be evaluated to determine if corrective action is needed. The evaluation process, which uses standards for image quality for each parameter, is described in annex F. The evaluation should be performed as soon after recording the results as possible. Other sources of information, such as the retake analysis, may also be used for evaluation as described in annex F.

(5) If corrective action is indicated by the evaluation, maintenance should be carried out following the procedures of annexes C and F.

d. The overall QAP will be reviewed annually in accordance with the procedures described in annex G to determine if revisions are needed to increase effectiveness.

Sample

5. **Communication**

Active communication between the members of the staff on QA problems and their solutions is essential to the success of the QAP. Annex H describes some of the communication actions that will be taken; but all staff members are encouraged to discuss problems related to the QAP with the responsible personnel at any time.

Figure C-1. Sample medical radiology QA manual (page 2 of 23)

Annex A. ASSIGNED RESPONSIBILITIES

1. All staff members have certain basic responsibilities. These include--

a. Maintenance of standards of cleanliness in the facility.

b. Being alert for unusual noises or motions or other signs of difficulties with the equipment, and calling these to the attention of the chief technologist.

c. Following the manufacturer's recommended start-up and close-down procedures for the equipment.

d. Cooperating with the QAP in general and the retake analysis program in particular.

2. In addition, specific responsibilities are assigned as follows:

Overall program responsibility	(Radiologist's Name)
Day-to-day supervision of the program	(QC Technologist's Name)
Reject analysis program	(QC Technologist's Name)
Monitoring of:	
Processor	(Technologist's Name)
Darkroom	(Technologist's Name)
Radiographic parameters	(Technologist's Name)
Fluoroscopic parameters	(Technologist's Name)
Evaluation of monitoring results by comparison with standards for image quality	(Technologist's Name) who performs monitoring
Detection of causes of unexpected problems	(QC Technologist's Name) and (Technologist's Name) who monitor components in question
Trend analysis, retake analysis	(QC Technologist's Name)
Authorization of corrective action:	
Standard repair and maintenance	(QC Technologist's Name)
Major overhauls	(Physician's Name)

Sample

Figure C-1. Sample medical radiology QA manual (page 3 of 23)

Annual review	(QC Technologist's Name) and (Physician's Name)
Approval of changes in program	(Physician's Name)
Revision of manual as needed	(QC Technologist's Name)
Training	(QC Technologist's Name)

Sample

Figure C-1. Sample medical radiology QA manual (page 4 of 23)

Annex B. RETAKE ANALYSIS

Retake analysis is the best tool for pinpointing problems to be corrected and for evaluating the effectiveness of the QAP. The retake analysis program follows the procedures described in detail in appendix 1 to this annex. The program is summarized briefly below.

RETAKE ANALYSIS PROGRAM

1. Data obtained from the retake analysis program will never be used for disciplinary or personnel action, but it will be used only for identification of systematic problems and evaluation of the program.

2. All staff members shall cooperate in assuring that each rejected film is identified and collected.

a. The radiographic identification (ID) printer provides the date and the technologist ID number. If the film was taken in a room other than the one to which the technologist is normally assigned, this is also noted on the film.

b. Rejected films are to be placed in the collection box next to the output tray of the processor.

3. At the end of each week, the chief technologist will categorize each rejected film as to date, room, technologist, examination, and reasons for repeating.

a. The categories of reasons for repeating will be too light, too dark, centering, position, motion, and other. The chief technologist will record the number of retakes in each reason category for each examination.

b. Up to three reasons may be used for each repeat.

c. The chief technologist is to be alert for obvious signs of difficulty, such as film artifacts, poor film/screen contact, and grid misalignment.

d. The chief technologist will also record the total number of films and the films per examination used each week.

Sample

Figure C-1. Sample medical radiology QA manual (page 5 of 23)

4. After the system has been in operation for 6 weeks, it will be assumed that the "start-up" effect is over and valid data is now being collected. At the end of the eleventh week, the chief technologist will begin to use the data in calculations.

a. Data can be pooled for use in the calculations to minimize the effect of chance occurrences. To form the initial pool, the chief technologist will combine the data from the seventh through eleventh weeks. From that point on, at the end of each week, the chief technologist will add the new week's data to the pool while dropping the data from the first week included in the pool.

(1) Each week, the chief technologist will calculate the following absolute retake rates using the current pooled data.

(a) Total retake rate for the clinic.

(b) Retake rate per category of retake.

(c) Retake rate per examination type.

(2) Each week, the chief technologist will also calculate the following relative retake rates using the current pooled data.

(a) The percentage of retakes for each reason in each room.

(b) The percentage of retakes for each reason for each technologist.

b. Absolute retake rates are calculated by dividing the number of retakes by the number of films used in the same period of time. For example, if 2500 films are used in the facility over a 5-week period and there are 200 retakes in that period, the total retake rate is 200/2500 or 8 percent. If 140 of those films were used for examination type A and there were 10 retakes for that examination, the retake rate for examination A is 10/140 or 7.1 percent.

c. Relative retakes are calculated in cases where the total number of films used is difficult or impossible to determine (for example, in the cases of the number of films used in each room or by each technologist). In this case, the number of retakes for each reason is divided by the total number of retakes. For example, if technologist A had to retake 45 films during a 5-week period, and if 9 of those were retaken because they were too dark, the relative retake rate for too dark films for technologist A would be 9/45 or 20 percent (that is, 20 percent of the retakes of technologist A were because the film was too dark).

Sample

Figure C-1. Sample medical radiology QA manual (page 6 of 23)

d. Absolute and relative retake rates cannot be directly compared to each other. However, absolute retake rates at different times can be compared to each other. Similarly relative retake rates of one technologist or room can be compared to those of another. The chief technologist will provide weekly summaries of the absolute and relative retake rates so that each technologist can evaluate how well he or she is doing compared to other staff members and also how well the facility is doing as a whole. The technologists are encouraged to discuss these summaries with the chief technologist to determine if there may be a problem and to work out ways to correct the problem.

5. As soon as absolute and relative retake rates are available, they will be analyzed to see what information they provide on the nature of the problems that should be addressed by the QAP.

6. The retake analysis has been under way for at least 14 weeks (6 weeks start-up period plus 8 weeks analysis period) before beginning to implement the remainder of the QAP. The retake analysis will continue throughout the life of the QAP, and the data from it will be used to pinpoint problems and to measure the overall effectiveness of the QAP as discussed in annex F of this manual.

Sample

Figure C-1. Sample medical radiology QA manual (page 7 of 23)

Annex C. QUALITY CONTROL MONITORING AND MAINTENANCE

QC monitoring involves testing the performance of the components of the radiological system through periodic measurement of selected equipment parameters. The monitoring schedule for these parameters is given in appendix 1 to this annex. The parameters to be tested are divided into the five groups below. The results of the measurements are analyzed, through comparison with the standards for image quality and through examination of the trends in their values over a period of time, with the goal of detecting problems before they become serious enough to noticeably affect image quality. QC maintenance actions are then taken to correct the problems as discussed in annex F.

1. General Condition of Facility

a. Visual inspections of the facility, including darkrooms, may reveal conditions that can cause difficulty if not corrected. No special measuring tools are needed to--

(1) Check for cleanliness, frayed cables, loose bolts, or unusual noises in the equipment operation.

(2) Assure that routine "warm-up," cleaning, and maintenance procedures are followed.

b. All staff members should--

(1) Be continuously alert for such conditions.

(2) Call any difficulties they cannot handle themselves to the attention of the chief technologist.

2. Processing and Darkroom

a. Processing. The basic monitoring procedure for the processor is to expose a film with a sensitometer; process it; and then, using density values determined from the film with a densitometer, calculate density difference (DD), mid-density (MD), and base-plus-fog (B+F) values. These values are plotted on control charts. When they exceed the limits of the standards for

Sample

Figure C-1. Sample medical radiology QA manual (page 8 of 23)

image quality, corrective action should be taken. A number of other processor parameters, such as temperature and flow rates, should also be monitored.

b. Darkroom. Excessive fogging of the film because of breaches in the darkroom integrity is a problem found in many facilities.

3. Radiographic Unit Quality Control

The following parameters should be checked with the ABC unit operated in the radiographic mode and for the DEF unit.

a. X-ray light field. The congruence of the x-ray and light fields of the radiographic generator is the closeness of agreement in position of the two fields. Poor congruence increases the possibility that--

(1) Tissues of interest will not be included in the radiographic image.

(2) Bordering tissue will receive unnecessary radiation exposure.

b. Exposure reproducibility, linearity, and beam quality. If good quality radiographic images are to be produced, the generator must consistently produce the same amount of radiation at the same settings (reproducibility) and the same exposure for a given milliampere second (mAs) regardless of the mA/time combination used (linearity). The primary beam must also have sufficient penetrating power (beam quality) to minimize unnecessary radiation exposure.

c. Kilovolts peak (kVp) accuracy. The kVp selected for an examination should be as high as possible to minimize the hazard of absorption of low energy x-rays, but low enough to provide adequate contrast for the purposes of the examination. Selection of the proper kVp becomes difficult, if not impossible, if the kVp indicators do not accurately depict the actual kVp produced and if the kVp does not remain consistent at different mA stations.

d. Accuracy and reproducibility of the exposure timer. The amount of radiation produced depends on the mA value selected and the length of exposure. Since most radiographic exposures are only a fraction of a second in duration, a small error in time of exposure can cause a large variation in the radiation produced. The time indicators on the generator should accurately represent the time of exposure, and the exposure time should be reproducible during a series of measurements at the same setting.

Figure C-1. Sample medical radiology QA manual (page 9 of 23)

4. Fluoroscopic Quality Control

When the ABC unit is operated in the fluoroscopic mode, the following parameters should be tested.

a. Beam restriction adequacy. To avoid unnecessary tissue exposure and to decrease scatter, restricting the primary beam to the area of interest is as important with fluoroscopic units as with radiographic units.

b. Focusing and resolution of intensified fluoroscopic image systems.

(1) Focusing is the process of adjusting the system to provide a clear image of the structure being examined.

(2) Resolution, which is an indicator of the degree of focusing, is the ability of an x-ray system to record separate images of small objects very close together.

c. Exposure rate. Because of the relatively long periods of exposure, the total radiation exposure received by patients during fluoroscopic examinations tends to be larger than the exposure received in most other examinations. To minimize this exposure, the exposure rate must be limited as much as possible.

5. Image Receptor Quality Control

Adequate film/screen contact is essential to prevent blurring or other distortions of the image.

Sample

APPENDIX 1

It is suggested that each facility develop an annual monitoring schedule with specific dates for those monitoring procedures done less frequently than daily. Space to initial and date each test as it is performed should also be supplied. Of course, unforeseen events may require shifting the dates somewhat, but it should be possible to stay fairly close to schedule. This appendix would need to be replaced each year; but, with a loose-leaf notebook, this should be a minor task.

Figure C-1. Sample medical radiology QA manual (page 10 of 23)

Note

The radiographic and fluoroscopic parameters mentioned above are often evaluated by the qualified expert who performs the annual survey required by TB MED 521, chapter 5. The technologists may monitor these parameters between annual surveys, if desired. As with all of this sample manual, this annex should be modified to be consistent with the policies and procedures of each facility.

Sample

Figure C-1. Sample medical radiology QA manual (page 11 of 23)

Annex D. TRAINING

Staff members must be trained to perform their QA duties, not merely assigned them. Primary training responsibility has been assigned to the individual listed in annex A.

1. The individual with primary training responsibility should have received training in QA monitoring, maintenance, and administration--

a. Through a formal program provided at a central point, or

b. In-house from one or more of the sources given in appendix 1 to this annex.

2. Other staff members should be trained in turn by the individual with primary responsibility. This training will occur in-house using the resources listed in appendix 2 to this annex. In addition, all staff members should be informed of and encouraged to take advantage of any training from outside sources, both of the types mentioned in paragraph 1 above (as the budget permits), and at professional meetings.

3. A description of the QA training received will be placed in each individual's personnel file.

Appendix 1

(List the appropriate training programs offered by film and equipment manufacturers, professional organizations, or government agencies. Include addresses and telephone numbers of contact persons.)

Appendix 2

(List the slide-tape packages, books, films, and so forth owned by the facility or available from outside sources. Include addresses and telephone numbers of the outside sources.)

Sample

Figure C-1. Sample medical radiology QA manual (page 12 of 23)

Annex E. RECORDING RESULTS

1. The results of the monitoring procedures are to be carefully recorded so that they will be available for analysis in the coming months and years. Examples of each form to be used are given in appendix 1 of this annex.

2. With the exception of the current processor maintenance log form, the forms are to be kept in the designated three-ring notebooks. The current processor maintenance log form is to be kept in the plastic sleeve hanging by the processor. When a maintenance log form is completely filled out, it should be replaced and the old form transferred to the proper three-ring notebook.

3. The completed forms are available for examination by all personnel. They should in general be examined at their point of storage, which is in the chief technologist's office in the case of the notebooks and the above mentioned plastic sleeve for the processor maintenance log. If it is necessary to remove any of these notebooks or forms from their place of storage, the material removed should be signed out using the sheet taped to the bookcase in the chief technologist's office. Immediately after use, notebooks or forms that were removed should be returned to their original point of storage.

4. All forms are to be kept for the life of the particular piece of equipment to which they apply, with the exception of the processor control charts. Processor control charts should be retained for a year and then discarded, unless in the opinion of the chief technologist they should be retained because of possible later value.

Sample

Figure C-1. Sample medical radiology QA manual (page 13 of 23)

Appendix 1

(The material in this appendix should include examples of the forms that are used by the facility.)

Note

If electronic recordkeeping systems are available and can store the required information, their use is encouraged. However, this annex will require considerable modification to accurately reflect such procedures.

Figure C-1. Sample medical radiology QA manual (page 14 of 23)

Annex F. EVALUATION OF MONITORING RESULTS AND THE CORRECTIVE ACTION TAKEN

Evaluation of the monitoring results and performance of necessary corrective actions will be carried out in accordance with the following procedures.

1. Immediately after completion of a monitoring procedure, the technologist performing the monitoring will compare the results with the appropriate standards for image quality (listed in appendix 1 to this annex).

a. If the standards for image quality are not met, the technologist will repeat the test to determine if the initial test results are valid.

b. If the initial results are valid, the technologist will immediately call this to the attention of the chief technologist.

(1) If the component of the system being monitored is the processor, the technologist and the chief technologist will attempt to diagnose the problem. Once the problem has been diagnosed, the chief technologist will--

(a) Either take the appropriate corrective action or authorize the technologist to take the action, unless that action would be done better by the manufacturer's representative or the in-house medical equipment repair (MER) personnel.

(b) Make any necessary service calls to the manufacturer's representative or the in-house MER personnel. (See appendix 2).

(2) If the component being monitored is other than the processor, corrective action will generally be carried out by the manufacturer's representative or the in-house MER personnel. The chief technologist will make the call to either the manufacturer's representative or the in-house MER personnel.

c. There must be documentation that the evaluation was carried out, the necessary corrective actions were taken, and the results of the corrective actions.

(1) The plotting of the DD, MD, and B+F points on the control charts will be taken as evidence that the evaluation of the sensitometric and densitometric results was performed. If corrective actions were taken, the

Figure C-1. Sample medical radiology QA manual (page 15 of 23)

nature of the actions and the results must be recorded in the processor maintenance log. In this case, corrective action would include routine cleanup and chemistry change actions as well as actions to correct a specific problem.

(2) For the other monitoring procedures, the technologist must indicate in the comments section of the appropriate form that the evaluation was carried out.

(a) If no corrective action was needed, a note stating this with the date and initials of the technologist is sufficient.

(b) If corrective actions were needed, the actions taken and the results should be given along with the dates and initials of those involved.

2. The chief technologist shall be responsible for evaluating monitoring results for trends that may indicate growing problems in cases where the standards for image quality have not yet been exceeded.

a. Schedule.

(1) When monitoring the processor, the chief technologist should look for trends on a weekly basis.

(2) Within 48 hours after the monitoring of any other parameter is completed, the chief technologist should compare these most recent results with those from the previous three or four monitorings to see if a trend is developing.

b. Additional monitoring. The chief technologist may order additional monitoring to confirm or reject the possibility of a trend appearing.

c. Corrective action. If it appears that a trend is developing, the chief technologist may authorize (or perform his or herself) the appropriate corrective action either by staff personnel or the manufacturer's representative to correct the growing problem before it becomes serious enough to adversely affect image quality.

d. Documentation. The documentation of this evaluation shall be--

(1) If corrective action was warranted, this action and its results will be recorded on either the processor maintenance log (in the case of the

Sample

Figure C-1. Sample medical radiology QA manual (page 16 of 23)

processor) or in the comments section of the form used to record the most recent monitoring results.

(2) If it appears that trouble may be developing but corrective action is not yet warranted, the chief technologist shall add a sheet of paper to the records after the most recent control chart or monitoring report with a brief note describing the suspected trend as a reminder to keep an eye on it.

(a) In the case of the processor, the chief technologist may want to examine the monitoring data as it is taken over the next 2 or 3 days rather than waiting for another week to pass before repeating the trend evaluation.

(b) In the case of the other parameters, the chief technologist may wish to order an increased frequency of monitoring in order to track the possible trend more closely.

3. Monitoring the equipment performance, analyzing the results for potential problems, and taking corrective actions will minimize unexpected breakdowns in equipment performance. Should such breakdowns occur, however, the chief technologist and the technologist(s) monitoring the component(s) where the problem may be occurring will work together to evaluate the data and pinpoint the problem.

a. Past monitoring results will be used for this evaluation, but additional tests may be necessary.

b. The results of the reject analysis and any other source of data will also be used where appropriate. The sudden increase of a certain cause of rejected films, for example, may indicate the component of the system causing the problem. Monitoring the performance of that component may then confirm the problem.

c. As with "routine" corrective action, once the problem is identified, the chief technologist will either take the corrective action his or herself, authorize a staff technologist to do it, or call in the appropriate manufacturer's representative.

d. A brief report on the occurrence of the problem, the steps taken to identify its source, the corrective action taken, and the results of that

Sample

Figure C-1. Sample medical radiology QA manual (page 17 of 23)

action should be written and filed in the appropriate section of the records notebook.

4. A qualified expert will make annual calibration and survey visits to provide the services described in TB MED 521, chapter 5. The reports from the qualified expert shall be filed in the appropriate section of the records notebook. The chief technologist, after consultation with the radiologist if a significant cost is involved, will authorize the carrying out of any recommendations made by the consultants with respect to equipment maintenance and use.

(Note: Again, example appendices are not included because of space limitations. It is suggested that the facility's QA manual, as a minimum, should have the following.)

Appendix 1. Standards for Image Quality

(This would be a summary table of the standards for image quality used in the facility with a notation of their sources. When a standard is changed, a brief description of the change and the reason for the change should be added.)

Appendix 2. Outside Assistance

(This would be a list of the names, addresses, and telephone numbers of manufacturer's representatives, consultants, government or professional organizations, and other groups or individuals who can be called for monitoring or maintenance help (for example, staff medical physicists, if available; the facility's health physics office, if present; the health physics office at the regional medical command; and the medical health physics program, U.S. Army Center for Health Promotion and Preventive Medicine). The nature of the assistance available from each one and copies of any written agreements should also be included.)

Sample

Figure C-1. Sample medical radiology QA manual (page 18 of 23)

Annex G. REVIEW AND REVISION

In addition to the evaluation of monitoring results that may lead to adjustment of equipment performance, the entire QAP will be periodically reviewed and revised as necessary to increase effectiveness.

1. The QAP shall be reviewed 3 months after fully established, again 6 months later, and annually thereafter. Special reviews may be scheduled if it appears that there are serious flaws in the program.

2. The first stage of each review shall be carried out by the chief technologist. The information to be used includes--

a. The retake analysis results.

b. The monitoring results.

c. Records of corrective actions required and their results.

d. Comment request, from all staff members, on the execution and effectiveness of the QAP.

e. Other available sources of information, such as equipment repair records, film usage records, etc.

3. As a minimum, the review process shall include--

a. Comparison of the total retakes from before the QAP was established to those after the QAP began operation.

b. Calculations of the impact of the QAP on patient care and radiation exposure.

c. Consideration of whether the monitoring procedures, monitoring frequencies, or standards for image quality need to be adjusted to increase effectiveness.

(1) As an aid in this phase of the analysis--

(a) The retake rates for each separate category of retake (too light, too dark, and so forth) should be plotted versus time, beginning with

Sample

Figure C-1. Sample medical radiology QA manual (page 19 of 23)

the rates before QA. The rates at the time of each separate review would then be added to the plot at the time of that review.

(b) The components of the system whose malfunctions may have caused each type of retake should be identified.

(c) The results of the monitoring of the different parameters of these components should be reviewed and the nature of the fluctuations of the parameter values with time summarized.

(2) The information collected in (1) above should then be used to determine if--

(a) Monitoring methods or frequencies should be changed, or

(b) The standards for image quality should be tightened or loosened.

d. A summary of the impressions of the other staff members on the effectiveness of the QAP as well as any of their suggestions for change.

e. A summary of what other sources of information (comparison of repair costs, downtime, or staff complaints from before and after the QAP began) tell about the value of the QAP.

4. The chief technologist will write a report summarizing the data obtained from the review steps given in 3 above. The report shall conclude with recommendations as to what parts of the QAP (if any) should be changed and how, and what parts do not require change. Justification for the recommendations based on the review data shall be given.

5. The radiologist will--

a. Review the report and other information he or she may request.

b. Approve or disapprove the recommendations.

6. The chief technologist will--

a. Develop plans for implementing any changes in the QAP approved by the radiologist.

b. After obtaining radiologist approval of the plans, make the changes.

c. Revise the facility QA manual to reflect the changes.

d. Explain to the staff any changes in their responsibilities.

Sample

Figure C-1. Sample medical radiology QA manual (page 20 of 23)

7. The chief technologist's report, the radiologist's response to it, and a summary of changes made will be filed in the appropriate records notebook.

Sample

Figure C-1. Sample medical radiology QA manual (page 21 of 23)

Annex H. COMMUNICATIONS

The facility staff will be kept fully informed of the purpose, procedures, and results of the QAP. In turn, all staff members are encouraged to call problems the QAP may solve to the attention of the chief technologist and also to make suggestions for improving the QAP. The methods for this exchange of information include, but are not limited to--

1. The Quality Assurance Manual

a. The QA manual will include--

(1) Up-to-date descriptions of the purpose of the QAP.

(2) Assignments of responsibilities to the staff members.

(3) Procedures to be followed in executing the responsibilities.

b. All staff members are encouraged to read the manual.

2. Reports

a. Reports to the staff on the QAP will be made by the chief technologist. They will include, but are not limited to--

(1) The weekly summary of retake analysis results mentioned in annex B.

(2) Reports on the findings of the annual review of the QAP and of any changes in the QAP resulting from the review. This general report will be supplemented with individual discussions between the chief technologist and those staff members whose responsibilities have changed as a result of the QAP changes.

(3) Reports, as warranted, when the QAP has achieved a particular success (so that the staff members may share in it) or unusual problems have arisen (so that staff members may be able to help with the solution).

b. Reports will also be requested from the staff.

(1) As part of the annual review process, the staff members will be asked for their general impressions of the QAP and suggestions on changes that need to be made.

Sample

Figure C-1. Sample medical radiology QA manual (page 22 of 23)

(2) Staff members will also be asked on an individual basis to help correct difficulties arising in the areas of the QAP for which they are responsible.

(3) Staff members are encouraged to call QA problems to the attention of the chief technologist or to make suggestions on improvement of the QAP whenever the problems or ideas occur, instead of waiting for the annual review.

Sample

Figure C-1. Sample medical radiology QA manual (page 23 of 23)

APPENDIX D

SENSITOMETRIC TECHNIQUE FOR THE EVALUATION OF PROCESSING

D–1. General

This appendix contains a detailed description on how to perform the STEP processor test. This test is always conducted with control film of the same type and from the same emulsion batch and the sensitometer and densitometer are calibrated with this control film. STEP stands for a processor test called the "Sensitometric Technique for the Evaluation of Processing." STEP uses a calibrated sensitometer, a calibrated densitometer, and a film with an established reference number. By using these tools and the STEP worksheet, qualified experts are able to measure how a facility's processor performs relative to an optimized system.

D–2. Processing speed

STEP "processing speed" does not refer to the system speed of the film-screen combination or the developer immersion time, but refers to a number representing the effectiveness of the processor. For STEP, a "processing speed" of 100 has been defined as optimal or ideal for standard processing. In other words, a standard cycle processor that has a STEP processing speed of 100 is processing the film at 100 percent effectiveness. A film processor with a STEP processing speed of 150 is overprocessing the film 50 percent more than optimal.

D–3. Use of sensitometer

The processor and STEP processing speed is determined for a processor by using a sensitometer to evaluate the exposed film. A 21-step sensitometer is used for the STEP test. The graph in figure D–1 (located at the end of this appendix) best describes the design of a 21-step sensitometer.

D–4. Purpose of STEP

a. The purpose of STEP is to find the step number and processing speed for a particular processor to determine if it is adequately developing film. Expose a film to the sensitometer. Find the speed density by determining the B + F + 1.0. Measure and record the densities of one step each immediately above and below the speed density. Plot a line between the optical densities and their corresponding step numbers from your measurements. Draw a horizontal line at the speed density value (B + F + 1.0) through your graph. The step number for a particular processor is where the speed density value intersects the other lines. From the chart on the STEP worksheet (see sample worksheet in figure D–2, located at the end of this appendix), using the calculated step number from the graph for that processor, you can determine the processing speed and the relative patient exposure. A copy of this worksheet is available from FDA, Center for Devices and Radiological Health (CDRH), HF2-210, 1350 Piccard Drive, Rockville, MD 20850.

b. Mathematically, this relationship is expressed by the equation:

$$\text{Processing Speed} = [10^{(\text{Reference Speed} - \text{Observed Speed}) \times 0.15}] \times 100$$

Where: The observed speed step is calculated from the particular processor. The reference speed step is given for the control film processed according to the film manufacturer's directions. 0.15 is the log of the relative exposures between steps on the sensitometer.

D–5. Calculated numbers

What exactly do these calculated numbers indicate for the particular processor you are testing? They indicate the efficiency of the processor. A standard cycle processor that is processing film optimally according to the film manufacturer's specifications is processing with 100 percent efficiency. It would have a calculated processing speed of 100. STEP can also indicate if the processor is over or under processing the film. If the facility is producing diagnostic quality films and they are over or under processing, this indicates that they are also under or over exposing the patient to radiation. These conditions are also indicated by the STEP processing speed. If a processor has a processing speed of 132, the facility is over processing from optimal by about 20 percent. It also means they are reducing the exposure to their patient from radiation by 20 percent of optimal dose. However, such an image is lacking detail that may be needed to diagnose disease and injury. The normal range one should find is a speed of 80-

120. If values outside these bounds are found, the problem should be identified and corrected. If a processor has a processing speed of 76, it indicates the facility is overexposing their films and their patient approximately 30 percent more than is optimally necessary for their film. This film also would be lacking detail that is needed to aid in diagnosis.

D–6. Value of STEP test

While not necessary for facilities to perform on a daily basis, the STEP test could prove invaluable after changing chemistry of film brands to determine which, if any, changes need to be made in the imaging chain.

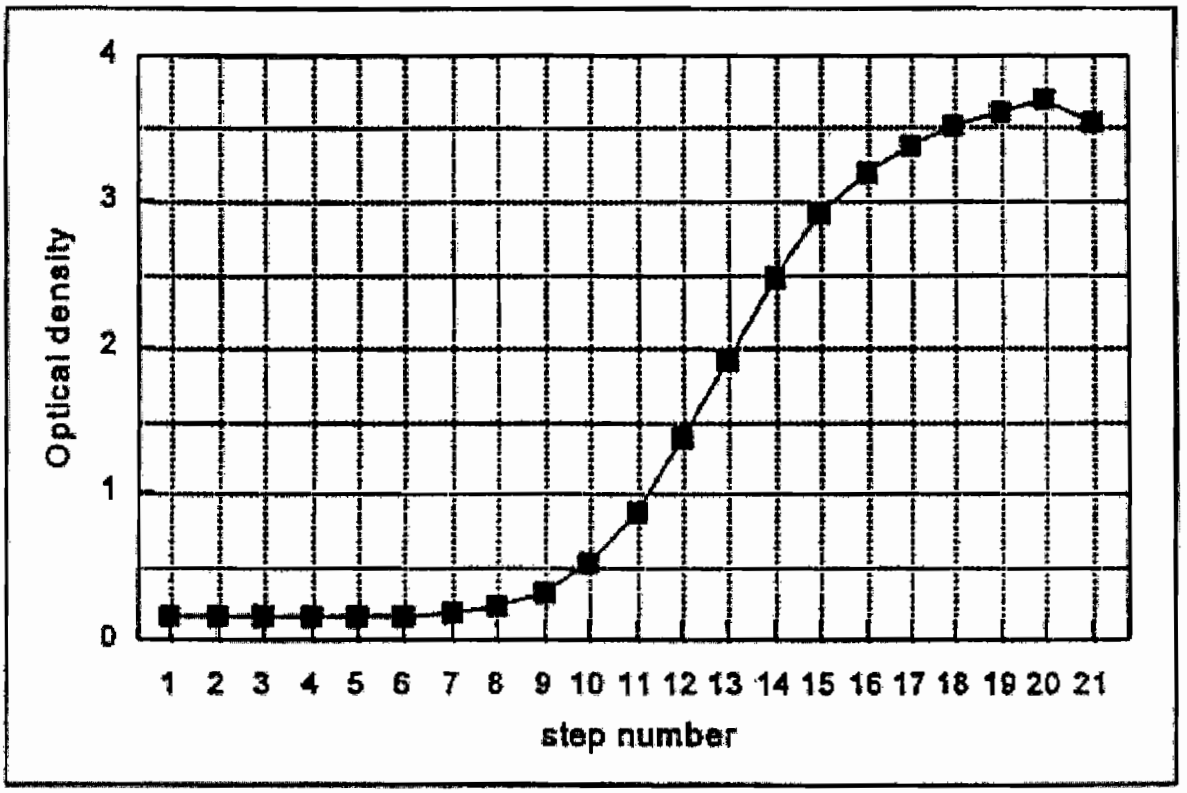

Where: Speed density equals B+F+1.0

The speed step is that step on the sensitometer corresponding to the speed density. Every other step doubles the relative exposure to the film.

Figure D-1. STEP number vs. optical density for sensitometer (H and D curve)

STEP WORKSHEET
"Reference Step Determination"

Before establishing the facility's STANDARD REFERENCE STEP NUMBER, it is absolutely essential that the film-chemistry-processor system be set up properly, using seasoned chemistry, and be within the daily QC limits. To ensure this verify that (1) the processor and associated developer immersion time, (2) chemistry, (3) developer temperature, and (4) replenishment rates are those recommended by the film manufacturer.

The film selected should be the film routinely used for quality control.

To determine the REFERENCE STEP NUMBER use the following procedure:

1. Flash the film, preferably all four edges, (but at least two edges), with a 21-step sensitometer using the appropriate light source for the film type. It should be flashed with the emulsion side towards the light source. Process the film normally.
2. Zero the densitometer.
3. Determine the SPEED DENSITY by adding 1.0 to the Base + Fog. (SD = B + F + 1.0)
4. Select the step whose density is just below and the step whose density is just above the SPEED DENSITY.
5. Read and record the density at the center of those steps. Determine the average for each step.
6. Plot both step numbers and their corresponding average step densities on the graph to the right. Connect the two points with a straight line.

   [Example: where SPEED DENSITY = 1.17, plot step 11 (density = 0.93) and step 12 (density = 1.38)]

7. Determine the intercept point of a horizontal line corresponding to the SPEED DENSITY with the line from instruction #6.

   [Given the example, CALCULATED STEP NUMBER = 11.5]

8. After repeating this test five times the resultant average step value becomes the REFERENCE STEP NUMBER. The range should be within +/- 0.5.

For the processing conditions set this way with this control film, the Processing Speed is set to = 100 and future Processing Speeds are calculated using the formula:

$$\text{Processing Speed} = [10^{(\text{Reference Step} - \text{Observed Step}) \times 0.15}] \times 100$$

. Base + Fog + 1.0 = _____ (SPEED DENSITY)

Density Readings

Step Number	Edge 1	Edge 2	Edge 3	Edge 4	Average

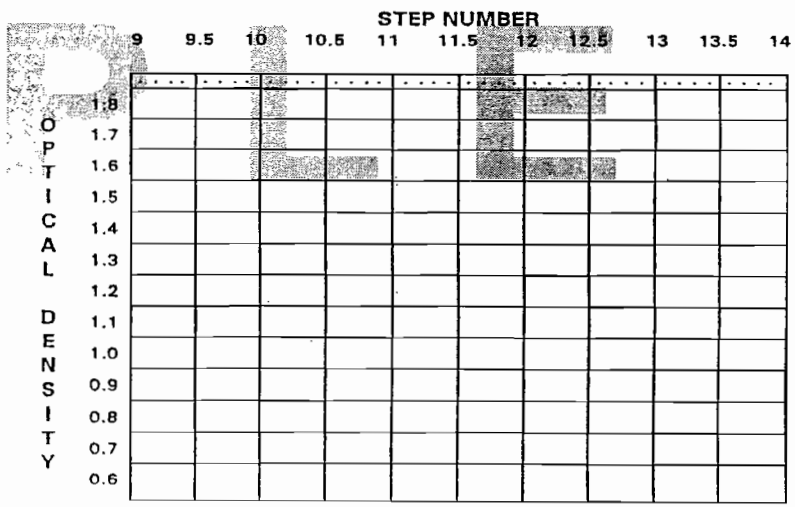

SAMPLE

Figure D-2. Sample STEP worksheet (1 of 2)

It is essential that the film-chemistry-processor system be set up properly, using seasoned chemistry, and be within daily QA limits.

To ensure this verify that (1) the processor and associated developer immersion time, (2) chemistry, (3) developer temperature, and (4) replenishment rates are those recommended by the film manufacturer.

The film selected must be from the quality control film box.

1. Flash the film on all four edges with a 21-step sensitometer using the appropriate light source for the film type. It should be flashed with the emulsion side towards the light source. Process the film normally.

2. Zero the densitometer.

3. Determine the SPEED DENSITY (SD) by adding 1.0 to the base + fog.

   (SD = B + F + 1)

4. Select the step whose density is just below and the step whose density is just above the SPEED DENSITY.

5. Read and record the density at the center of the steps and average the values for each set of steps.

6. Plot both step numbers versus their corresponding average step densities on the graph to the right. Connect the two points with a straight line.

   [Example: where SPEED DENSITY = 1.17, plot Step 11 (density = 0.93) and step 12 (density = 1.38)]

7. Determine the intercept point of a horizontal line corresponding to the SPEED DENSITY with the line from instruction #6. Read its CALCULATED STEP NUMBER from the graph's X-axis.

   [For the given example CALCULATED STEP NUMBER = 11.5]

8. Subtract the CALCULATED STEP NUMBER (Cal STEP #) of instruction #6 from the previously determined REFERENCE STEP NUMBER (Ref. STEP #). This difference in the step values is the Delta Step.

9. Look up the Delta Step in the table and find the PROCESSING SPEED and the relative patient exposure.

$$\text{Processing Speed} = [10^{(\text{Reference Step} - \text{Observed Step}) \times 0.15}] \times 100$$

Delta Step	Processing Speed	Relative Patient Exposure
-2.0	50	2.0
-1.8	54	1.9
-1.6	57	1.8
-1.4	62	1.6
-1.2	66	1.5
-1.0	71	1.4
-0.8	76	1.3
-0.6	81	1.2
-0.4	87	1.2
-0.2	93	1.1
0.0	100	1.0
0.2	107	0.9
0.4	115	0.9
0.6	123	0.8
0.8	132	0.8
1.0	141	0.7
1.2	151	0.6
1.4	162	0.6
1.6	174	0.6
1.8	186	0.5
2.0	200	0.5

STEP WORKSHEET

Density Readings

Step Number	Edge 1	Edge 2	Edge 3	Edge 4	Average

Base + Fog + 1.0 = _____

Reference Step Number = _____

Calculated Step Number = _____

Ref STEP # - Cal STEP # = _____ Delta STEP = _____

Processor Speed = _____

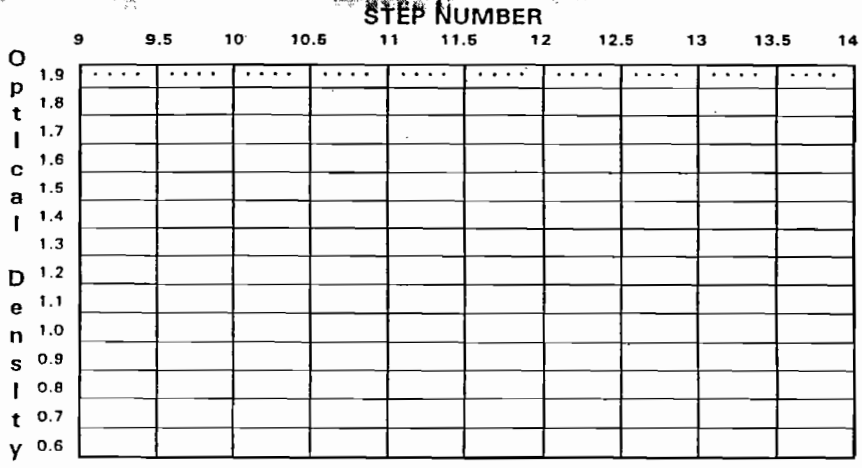

SAMPLE

Figure D-2. Sample STEP worksheet (2 of 2)

APPENDIX E

PROCEDURES FOR ESTABLISHING OPERATING LEVELS

E–1. Introduction

One of the problems in establishing a QC program is that there are no preset standards for what the operating levels should be. Film from different manufacturers, film of different types, and even film from different batches may produce an image of differing optical density under the same conditions. This makes it impossible to use one overall set of standards. The procedure below should be followed by each facility to establish the operating levels for their film and chemistry.

E–2. Procedure

a. Drain the developer and fixer tanks in the processor, and flush the tanks and racks with fresh water. Do not use a systems cleaner at this time.

b. Replace the developer recirculation filter, and ensure that the processor is functioning normally.

c. Drain and flush the replenisher tanks and hoses with fresh water.

d. Carefully mix fresh developer-replenisher and fixer.

e. Refill the replenisher tanks, operating the replenisher pumps temporarily to assure that—

(1) All fresh water is flushed out of the replenisher lines.

(2) The replenisher pumps are functioning properly.

f. Flush the processor fixer tanks again with fresh water.

g. Fill the fixer tank with fresh fixer and replace the fixer rack.

h. Again flush the developer tank.

i. Fill the developer tank with fresh developer-replenisher and the correct amount of starter as noted in the manufacturer's instructions.

j. Carefully replace the developer rack, crossover racks, etc.

k. Allow the processor to operate for 30 minutes.

l. Check the developer temperature, fixer temperature, and wash temperature. The chemistry temperature should be within 0.5 °F (0.3 °C) of the manufacturer's recommended temperature.

m. Check the replenishment rates and the time it takes for a film to pass through the processor. (The time from when the leading edge enters the processor to when the leading edge exits the dryer.)

n. Allow the processor to be used until 50 films (35 by 43 cm or equivalent), per gallon of developer, have been processed.

o. Expose six control strips with a sensitometer. If using double emulsion film and the sensitometer exposes only one side of the film, expose a strip on each side (that is, three films with two exposures on each film).

p. Wait at least 30 minutes, then process the control strips with the lightest step leading, all on the same side of the feed tray.

q. Zero and calibrate the densitometer.

r. Read the densities of each strip. Be sure to read the density in the center on each step, not near the edges. Check the zero and calibration of the densitometer after each strip.

s. Determine the average of the densities of the six strips at each step, and select and mark the steps producing average densities nearest 0.25, 1.0, and 2.0 above the B + F level of the film.

t. Record the following as the operating levels on the control charts:

(1) DD. The difference between the densities of the step nearest 2.0 and the step nearest 0.25.

(2) MD. The average value nearest 1.0.

(3) B + F. The density at a point off the exposed steps and away from the edge of the film.

u. Set the operating levels as indicated in chapter 6, paragraph 6-3.

NOTE

The spent developer and fixer must be disposed of according to current regulations. Contact your hazardous waste coordinator to ensure that this is handled properly.

APPENDIX F

PROCESSOR MONITORING

F–1. Introduction

The following processor QAP (paras F–2 through F–18) is excerpted from HHS Publication FDA 83-8218.

a. The original paragraph numbering has been changed to match the format used in the rest of this bulletin.

b. Reference to figures and the figure numbers have been changed to match the format used in the rest of this bulletin.

c. In a few instances, a sentence has been added to refer the reader to other areas in this bulletin.

F–2. Select a sensitometer

a. A processor QAP must allow isolating processor variation from x-ray generator variation. For this reason it is necessary that the facility possess a sensitometer so that they may expose film by a means other than the x-ray unit.

b. A sensitometer is a device containing a light source and a timing mechanism designed to give precise, repeatable, and graded light exposures to the photographic film. The sensitometer is used to expose pieces of radiographic film, called sensitometric control strips, which are then processed to provide information for evaluation of processor operation.

c. Sensitometers are available commercially with a range of performance levels and special features and thus a range of prices. Reproducibility in exposure of the control strips is important but adequate reproducibility for a daily QAP may be available from a lower priced sensitometer. Similarly, if you plan on using your sensitometer only for daily QA, you will not need the special features of the more expensive models.

d. On the other hand for sensitometric evaluations of photographic materials to determine which film is the best for a particular application, the sensitometer must match the conditions under which the film will be used in the department as closely as possible. The sensitometer must be capable of reproducing the exposure time for the radiographic screens to be used with the film. In general, smaller facilities would not need to carry out such evaluations but could rely upon findings at larger research centers. A relatively inexpensive sensitometer may be adequate for your needs.

F–3. Select a densitometer

a. A densitometer is a device that measures the blackening or optical density of a developed radiographic film. To evaluate processor operation, sensitometric control strips are processed, their densities are measured with the densitometer, and these measurements are compared to standard or past values depending on the type. A densitometer may measure the density electronically or visually.

b. Visual densitometers are the least expensive as they make use of the human eye to compare the density of a known value to that of a sample strip. However, there are problems with eye fatigue, reading densities above 2.0, and if more than one individual is doing the reading, repeatability with these densitometers.

c. These problems are minimized with electronic densitometers but such electronic densitometers are more expensive and offer additional features that may or may not be needed. Nonetheless electronic densitometers are preferable in all situations and are essential if you are planning sensitometric evaluations of photographic materials, reading large numbers of films or will have several staff members involved in the reading.

d. Read and follow the manufacturer's instructions for your sensitometer and densitometer.

F–4. Select steps on the control strip

a. A sensitometric step tablet is used in the sensitometer to give a range of exposures to the sensitometric control strip. The density range of the step tablet should be at least 3.0 and each step should be at least 9-mm wide. Most sensitometers supplied by manufacturers have tablets with 11 or 21 steps. This number is essential for sensitometric evaluation of photographic materials but for daily QA monitoring, it is necessary to measure only the density of the B + F region plus that of the three steps which are about 0.25, 1.00, and 2.00 above the B + F level of the film. The B + F level is the density of the film which has received no radiation or light exposure and has been processed normally. It is used to monitor the extent to which the film is exposed by other than diagnostic radiation, such as extraneous light in the darkroom. If for example the B + F level for a particular film is 0.25, the three steps used would be those with densities of about

0.50, 1.25, and 2.25. The B + F + 1.00 step will be used as the MD step. The difference between the other two steps, which normally will be about 1.75, will be used as the DD.

b. Care must be taken in the use of commercial sensitometers in daily QAPs. The existence of 11 or 21 steps means that the density differences between adjacent steps are small. If the use of the sensitometer introduces variability in the densities produced, this added variability may obscure the processor variability that we are trying to detect. To minimize additional variability it is important that the sensitometric control strips be fed into the processor so that the less dense end of the exposed film will be leading and so that the strip always moves across the same location of the feed tray each time (extreme right side is recommended). Ignoring these precautions will introduce a surprising amount of variability in the density of the processed film.

F–5. Obtain control film

a. Obtain a sufficient quantity of control film produced with photographic emulsion from the same batch and assure that it is stored properly.

b. The photographic emulsion is the part of the film sensitive to light and x-rays and is present in one or two layers on the film. Emulsions are made up in batches and despite rigorous manufacturer QC efforts, the characteristics may vary from batch to batch. In general these variations are quite small so are not of concern when radiographs are made of patients. However, the goal of your QAP should be to detect problems before they affect patient care. Thus, the sensitometric-densitometric monitoring methods are more sensitive detectors of film variability than normal film viewing methods. They may be sensitive enough to detect batch to batch differences not seen when films are viewed on the viewboxes.

c. It is important that these emulsion variations not be confused with or mask variations due to processor performance. For this reason, when ordering film for use with your sensitometer-densitometer in QA monitoring, be sure you order enough film to last for 6 months to a year so that the same emulsion batch will be used during this period. This control film should be of the same brand and type normally used in the processors in which it will be processed. To save costs, it may be the smallest size film which will produce a complete image of your step tablet and will work in your processor, even if larger films are normally used for patients.

d. You may experience difficulty at first in ordering a sufficient supply of film with the same emulsion number. You should work with your technical representative on this. Each time you change control film from one emulsion batch to another, you must obtain a conversion factor which will allow you to convert the data taken with one emulsion batch to be equivalent with the data from the other batch. This is necessary to be able to compare data taken over a period of time. To save time you should try to avoid having to do this more often than once every 6 months to a year. However, you will have to change control film from time to time, either because your previous supply is exhausted or because the facility is using a new kind of film. (The procedures for doing this are described in appendix G of this bulletin.)

e. Once you have obtained your supply of control film, you must store it carefully so that there is no deterioration. The last sheet used should have the same properties as the first one used 6 to 12 months earlier. As a minimum it is recommended that the control film, and preferably all film, be stored in a room maintained at 50 to 70 °F (10 to 21 °C) and 40 to 60 percent relative humidity. Low background radiation levels and freedom from chemical fumes should also be maintained. Freezing of film for storage is even more desirable; it virtually stops deterioration caused by temperature or humidity although it cannot prevent fog caused by background radiation. With either cold or frozen materials, care must be taken to allow the materials to return to room temperature before use and to prevent the condensation of water vapor on the film. The best way to do this is to leave an unopened box of film on a shelf at room temperature for at least 8 hours. Once the container seal has been broken, the film should not be returned to a cool or freezing condition. Care should be taken not to warm more than a weeks supply of control film at a time to prevent excessive deterioration.

F–6. Obtain an accurate (0.5 °F (0.3 °C)) thermometer

a. The most common cause of poor processor performance is failure to maintain the proper processing temperature. Temperature monitoring and correction will reduce the processing problems detected with sensitometer/densitometer monitoring. Should problems occur anyway, checking the temperature as a first step will often be all that is needed to locate the cause of the difficulty. An accurate thermometer is needed for this purpose.

b. Never use a mercury thermometer in a radiographic darkroom. In general, any glass stemmed thermometer should be avoided because, even if filled with a material such as alcohol, removal of all

the glass and liquid if the stem is broken will be difficult and possibly expensive. Mercury thermometers present a particular hazard because mercury is a contaminant even at a few parts per million, and it is virtually impossible to remove all traces of mercury from a developing tank or a darkroom when a mercury thermometer breaks. A digital thermometer is recommended, although a dial type with a 6- or 8-inch probe is an acceptable alternative. Commercially available digital thermometers provide superior accuracy and are relatively inexpensive. If a dial thermometer is used, the total range of dial readings should be as small as possible while still covering the recommended processor operation range. Your readings should always be taken at the same location, one which has been chosen for reproducibility. Such locations must be found by trial and error through taking repeated readings at a number of points after the processor has stabilized and using the locations with the most reproducible values for future monitoring.

c. Another precaution is to always wipe the thermometer dry immediately on removing it from the developer or fixer tank. The thermometer should then be rinsed in running water before future use. This procedure will prevent the inadvertent transfer of developer into fixer.

F–7. Setup a log book

This log would not be used to record the measurements taken by the sensitometer, but rather the use time of the sensitometer. This log can be kept rather simple. It should contain the date of each use, the duration of each use, the cumulative on-time, and the initials of the person who made the entry. Its primary purpose is to keep a running total of the hours of use so that you may be aware of when the light source is approaching the end of its life. This is especially important for sensitometers with tungsten lamps which should be replaced after the number of hours recommended by the manufacturer. Continued use of a lamp beyond its recommended lifetime is false economy as you run the risk of deterioration in the lamp affecting your data and unexpected burnouts at inconvenient times.

F–8. Check densitometer calibration

a. Your electronic densitometer should be calibrated when it leaves the manufacturer. However, the manufacturer should also supply you with a calibrated step tablet covering a range of 3.0 in density with density differences between steps of 0.3 or less. Upon receiving your densitometer, carefully follow the manufacturer's instructions for using this tablet to verify that the densitometer is still calibrated over the range specified. When reading any step tablet, the density should be measured in the center of the step. As you check the calibration, you should find that the values given for the wedge and those indicated by the densitometer agree to about ±0.02 or ±0.03, depending upon the specifications of the densitometer, for all steps of the wedge. If any of the steps are out of calibration, you should ask the supplier to correct the defect.

b. The calibration of your densitometer should also be checked daily during use to guarantee that it is not creating additional variability in your data. Again the calibrated wedge supplied by the manufacturer should be used for this. Some facilities prefer not to use the manufacturer's wedge for these routine checks to minimize the chances of damage or loss. As an alternative, they construct secondary standards. However, if reasonable care is taken in the use and storage of the manufacturer's step wedge, production of a secondary standard should not be necessary.

F–9. Construct and maintain a densitometer control chart

The results of the electronic densitometer calibration checks should be recorded on the densitometer control chart and the data evaluated periodically to determine if the densitometer is adding excessive variation to your readings. To maintain the control chart, the following steps should be carried out every day before the densitometer is used for radiographic QA work.

a. Turn on the densitometer power supply and light source, and allow it to warm up for at least the minimum period specified by the manufacturer.

b. Zero the densitometer according to the manufacturer's instructions.

c. Read the center of the three steps on the manufacturer's calibration step tablet that are closest in density to the monitoring steps selected in paragraph F–4. Record the density values on the densitometer control chart.

d. If any of these calibration readings vary more than ±0.02 or ±0.03 (according to manufacturer's specifications) from the original values found in paragraph F–8, recheck the readings.

e. If any of the densities measured using the manufacturer's calibration step tablet densities vary more than ±0.02 or ±0.03 (according to manufacturer's specifications) from the correct value, your densitometer is in need of calibration. Consult the manufacturer or his representative. (Note any discrepancies and the date on your densitometer control chart.)

F–10. Use of visual densitometer

There are no QA procedures for the visual densitometer equivalent to those for the electronic densitometers. This is another reason why electronic densitometers are preferable.

F–11. Test darkroom for light fog

Two methods of performing this test are presented in appendix H of this bulletin.

F–12. Set processor at manufacturer's optimum conditions

a. Make sure that your processor is set at the manufacturer's optimum conditions for the film-developer combination that you are using. If the manufacturer does not supply recommended processing conditions for your film-developer, combination, you should optimize processing conditions yourself.

b. It is generally most desirable from a QA standpoint to use the chemistry recommended by the manufacturer of your film or at least a chemistry for which the manufacturer can provide recommended processing conditions. In such a case, your only concern in this step is to make sure the processor is operating as close as possible to the temperature and speed recommended by the manufacturer. However, you may be using a chemistry for which the manufacturer of your film cannot provide recommended processing conditions. In such a case, you should seriously consider going through the process of optimizing your processor.

c. Optimization should be considered because if the processor is operated at nonoptimal conditions, it is possible that the techniques of the radiographers have been adjusted to compensate for this. Such adjustments often lead to unnecessary exposure being given and may not be entirely successful in counteracting the bad effects of sub-optimal processing on image quality. On the other hand, you should be aware that if techniques have been adjusted to fit your present sub-optimal processing condition, you will probably have to adjust the generator techniques again if you optimize your processor. Otherwise, you may find yourself in the curious position of having your processor working better than ever before yet be receiving complaints about film quality because the old compensating techniques are no longer the desirable ones.

F–13. Establish image quality standards

a. If you have not already done so, establish your Standards for Image Quality for the processor.

b. There will always be some variation in equipment performance no matter how good your QAP. Thus, it is important to have established Standards for Image Quality to help the staff determine when the variation detected by their monitoring is serious enough to affect the quality of the image. In the case of the processor, you will be processing a daily control strip exposed in a sensitometer. Using a densitometer, you will obtain three values for each strip: the density of unexposed film (Base plus Fog or B + F) the density of a medium density step (MD), and the difference in density (DD) between a high and low density step. With automatic processing and a sensitometer and densitometer operated and calibrated as discussed above, the B + F density should be within ±0.05 optical density units of the expected value while the values of MD and DD should be within ±0.10 of the expected values. In the case of hand processing, it might be necessary to increase your control limits to ±0.15 although with practice and care ±0.10 is achievable even with hand processing.

c. If the measured values are within these limits, the operation of the processor can be considered satisfactory. Thus, these limits can be used as your Standards for Image Quality. If your measured values consistently fall outside of these standards, some corrective action is needed to improve processor performance as discussed below.

F–14. Construct processor maintenance logs

a. Processor maintenance logs are used to maintain a permanent record of preventive maintenance, corrective maintenance, and cleaning of the processor. The log should be kept near the processor, so that the information is clearly visible as a reminder of the actions that must be carried out. Such a log is particularly useful in allowing quick checks to see if things have been done and in tracing changes in processing conditions that may take days or weeks to become apparent.

b. Each action should be dated and initialed. If difficulties are detected during monitoring the processor maintenance log may contain hints as to where to begin looking for the solution. For example, if it has been some time since the racks were cleaned or the developer filter changed, these may be the source of your difficulty. If problems appear immediately after developer or fixer replenisher tank was filled, the problem may be an improperly mixed batch. In general, the processor maintenance log will be quite useful, not only as a check on determining that things get done, but also as an analytical tool to locate problems.

F–15. Processor control charts

a. A processor control chart is a graphical method of presenting the data collected by monitoring over a period of time. This allows examination not only of the situation on a particular day but of the trends in your processor's performance with time. Such trends may be more useful as indicators of pending problems and their sources than the daily values.

b. This chart provides space to record B + F, MD, and DD readings taken over a period of a month. It is suggested that horizontal lines showing the control values used as Standards for Image Quality (+/-0.10, +/-0.05, etc.) be drawn in with red ink so that it is immediately apparent when the variation exceeds the acceptable values. A separate control chart should be used for each processor. Fill in the chart immediately after the data is taken to avoid the possibility of forgetting or losing it. The following are also suggested:

(1) Connect the data points with straight lines.

(2) If your measured data indicates the processor is exceeding the control limits, plot it anyway and circle all three points even if only one point is out of control. Then after the situation has been corrected, plot the data points which correspond to the corrected levels and indicate the changes in the comments section.

(3) Indicate chemistry changes by a double vertical line on the chart.

(4) Examine the control chart daily for trends or indications of problems.

c. Copies of these charts are usually available from the processor manufacturer or publications on quality control. Figure F–1 provides a filled-in sample showing what a processor control chart may look like.

F–16. Daily Processor Monitoring Procedures

The processor is the piece of equipment in your facility that is most susceptible to variation. The quality of its performance can fluctuate greatly from day to day or even during a single day. Because of this variability, the frequency of QA actions directed at the processor must be higher than for other equipment if they are to be effective. There are a number of actions that in general should be taken daily. These are—

a. Turn on all processors and follow the manufacturer's start-up procedures.

b. Allow sufficient time for the temperature to stabilize.

c. Check solution temperatures, replenishment rates, water temperature and flow rates, and dryer temperature to make sure they are at the manufacturer's recommended levels. Ideally your unit will have built-in thermometers and flow meters to facilitate this.

d. Process clean-up sheets (exposed but unprocessed film) to remove any residue from the racks and to check for processor scratches.

e. Expose a sensitometric control strip (one on each side of dual emulsion films) for each processor and process with the light density end of the wedge leading to avoid variability because of the direction factor. In addition, care must be taken to assure that the control strip is processed at the same location on the processor feed shelf (left-to-right) each time. For consistency, the strips should always be processed at roughly the same time interval after exposure. The control strip should be exposed before any patient film is run in the morning but after the processor is fully operational. This will allow determining if the chemistry was contaminated or degraded during the previous day before the new day's work-load begins. This will also avoid the possibility that any film processed just prior to the control strip will have upset the chemical equilibrium. On the other hand, it is recommended that the strips be processed approximately 1 hour after the machines have been brought up to temperature, if there is this much time before the patient work begins, to guarantee temperature stability has been achieved. In summary, the most important thing is that the strips be exposed and processed in the same way each time. This will lessen the chance that variability in the data will result from causes other than variability in the performance of the processor itself.

f. The density of the three steps selected for use under Step 3 of 5.1.1 plus the B + F level should be read (with each step being averaged from the two exposures on the dual emulsion film). The B + F, MD, and DD values should be plotted. To illustrate the plotting of this data, assume the initial measured values of the density for a processed strip were 0.21 for B + F, and 0.46, 1.21, and 2.22 for the three selected steps. You would thus use 0.21, 1.21, and 1.76 (2.22 - 0.46) for your B + F, MD, DD values, respectively. These values would be recorded on the midlines of the three graphs of the control chart as shown in figure F–1 (located at the end of this appendix) and also as dots in the middle of the Day 1 columns. On the second day, these values might be 0.23, 1.23, and 1.77. These values would be plotted in the Day 2 column and the dots connected by straight lines. As you can see, the processor performance has varied slightly from Day 1 to Day 2 but the variation is within the Standards for Image Quality (shown by dashed horizontal lines) which have been selected. As time passes the amount of

variation increases in our example and occasionally the measured value of one or more of the quantities falls outside the control limits as indicated with the circled dots (the dots for all three values are circled even if only one falls outside the limits). However, through the corrective actions discussed below, it is usually possible to bring the processor performance back within limits as indicated by the readings on a new strip. The dots from these new readings are plotted and are used to extend the graph while a notation is made of the action taken under remarks.

g. If all three data points fall between the Standards for Image Quality, and no trend is apparent, the processor is in control and needs no further attention until Step 12 at the end of the day. If one or more data points fall on, or exceed the standards, then the following steps should be followed.

h. Process and measure another pair of control strips (one on each side of a dual emulsion film) to assure that the apparent change was not because of experimental error or random variability.

i. If the change is real, then the problem must be located. The following sequence of checks can be used to locate problems. The rack cleaning, replenishment dates, and processor maintenance dates recorded in the processor maintenance log should be checked first. If contamination has occurred or a batch of replenisher was improperly mixed, these effects should show up within a day or two of the log dates. Thus, these factors can probably be eliminated as a source of the problem if the dates were some time in the past. However, even if the dates are such as to make one or more of these problems a possibility, you should still complete the checks below. Correction of these problems requires a major and somewhat expensive effort and should not be undertaken unless you have eliminated the other causes first. Check the developer and water temperatures next since improper operating temperatures are perhaps the most common cause of poor processing. Check replenishment rates, water flow, transport time, recirculation pump, and filter condition last.

j. Take the necessary action to correct the problems located in the previous step. If all else fails, change the chemistry. If the developer is changed and the levels on the control strip are still outside of the control limits (after adding the recommended starter and allowing the processor to operate for 1 hour), check all possible variables again. If a second change in the developer does not bring the levels back to normal, contact the technical representative from your film and or chemical manufacturer.

k. After the final corrections are made, additional sensitometric control strips must be processed. The new data points should be recorded on the control chart, along with the out of control points, and the specific corrective action noted on the control chart.

l. At the end of the day, follow the shutdown-procedures described by the manufacturer or your processor.

F–17. Weekly Processor Monitoring Procedures

a. Check processed films for residual fixer. If fixer remains in the radiographic films after processing, it will combine with the silver of the image to form silver sulfide. This causes fading of the radiographs after relatively short periods of time. The recommended test procedure is:

(1) Process one sheet of unexposed film in the normal matter.

(2) Place one drop of the residual fixer test solution on each side of the film but in different areas so they do not superimpose. Allow the drops to stand for 2 minutes then wipe off the excess.

(3) Compare the stain with the test color patches (obtainable from most photographic dealers) by placing the test patches over the film near the spots and comparing on a standard view box.

(4) Both sides of the film should pass this test. If the test indicates there is excessive fixer remaining and you are sure the water flow rates are correct for your processor, contact your technical representative for aid.

b. Check operation of any silver reclaiming apparatus and verify that the maximum amount of silver is being reclaimed. Test kits for this can be obtained from the manufacturer of the reclamation unit.

c. Check water flow rates and replace filters as required. In many areas, you may find this should be done more often than weekly. The water flow rate must be kept at the level specified by the manufacturer. A reduced flow rate is often an indication that the filter needs to be changed.

F–18. Processor Maintenance and Cleaning

a. The complete cleaning of the radiographic processor using cleaning solutions may require most of a working day to do a satisfactory job. In view of the effort required, it is to your advantage to carry out certain partial cleaning jobs as discussed below. Taking these steps will hopefully allow you to avoid the need to clean the processor more often than every 6 months and to avoid the need to use cleaning solutions when you do clean it, thus holding cleaning time to an hour or two. However, the results of the sensitometric monitoring tests should be your guide here. If the tests show problems exist and these problems are not corrected by other actions, a chemistry change and cleaning may be needed. Also in low workload facilities, it may be

necessary to change the chemistry and/or clean the processor more often although it may not be necessary to clean the processor every time you change the chemistry.

b. The goal in the cleaning process should be to take such care that you can carry out the entire process without getting any spots of chemicals on you or your lab coat. If cleaning the processor leads to contamination of the room or the working area, you will either have to clean up the contamination at the cost of a great deal more work or run the risk of the radiographs becoming contaminated during processing leading to artifacts and other difficulties.

(1) Follow the periodic preventive maintenance procedures specified in the manufacturer's literature.

(2) Clean cross-over racks daily.

(3) Check processors daily for unusual noises or odors.

(4) Check processors and darkrooms daily for cleanliness.

(5) Clean processing racks weekly to remove chemical deposits. This is the most important weekly procedure. The major concern is to remove chemical deposits and to check for physical wear. Removal of discoloration of the racks is not important.

(a) Install the appropriate splash guards when removing the developer and fixer rack. Relatively small amounts of fixer can contaminate the developing solution. Do not use the same splash guard for fixer and developer tanks without first rinsing it in running water and wiping it dry.

(b) The developer and fixer racks should be handled separately at all times and should not be cleaned in the same sink until the sink has been flushed with fresh water. Removing the racks is a two person job. They should be lifted slowly to allow the chemicals to drain from the rack into the proper tank. When most have drained, a large plastic tray should be slipped underneath to catch the remainder as the rack and tray can be removed. Caution here will reduce the amount of clean-up required inside the machine later.

(c) The racks should be completely flushed with running water and wiped with a soft cloth. Chemical deposits may be removed with a soft brush but in general care should be taken as the rack material can easily be damaged. **Do not** use systems cleaner for weekly cleaning of the racks. **Do not** use any acid cleaner, strong detergent, or abrasive cleaner.

(d) Once cleaned, the racks should be checked for wear. The gears should mesh properly and there should not be too little or too much slack on the drive chain (check the manufacturer's maintenance instructions for aid here).

(e) After adjustment, the racks should be rinsed again with fresh water. The excess water should be drained off and the racks lowered slowly back into the proper tank.

(f) After replacement, a control strip should be run to assure that the processor is still within limits.

(6) Clean all internal and external surfaces of the processor with a damp cloth on a weekly basis.

(7) Replace developer and fixer recirculation filters on a monthly basis.

(8) Drain processing chemicals and clean processing tanks and racks every 6 months using systems cleaner only if necessary.

Warning

- Wear rubber gloves and protectiv goggles at all times while using systems cleaner. NO ONE should be in the work area without protective goggles.
- Do not use fixer systems cleaner in the developer tanks or developer systems cleaner in the fixer tanks.
- Do not sub merge the processing racks in cleaning solutions under any condition.
- Do not use any other cleaning solution with the systems cleaner.
- Do not use steel or aluminum cleaning utensils or scouring pads with systems cleaner. Plastic, nylon, and Teflon® are the only materials that should be used with systems cleaner.

(a) The first step is to drain all of the solution tanks thus making it possible to remove the processing racks without the usual procedures for draining chemicals from the rack. A plastic tray should still be placed under the racks as they are removed to prevent dripping of chemicals into the interior.

(b) Remove the recirculating filters from the developer and fixer systems, drain all replenisher tanks, clean and flush with water or the appropriate cleaners recommended by the manufacturer (it should not be necessary to use systems cleaner), and put a few inches of fresh water in each tank.

(c) The solution tanks should be flushed with running water.

®Teflon is a registered trademark of E. I. DuPont de Nemours & Co., Inc.,Wilmington, Delaware. Use of trademarked names does not imply endorsement by the U. S. Army but is intended only to assist in identification of a specific product.

(d) The processing racks should be placed in a deep sink and flushed with water. Developer and fixer systems cleaner should be mixed according to instructions and placed in the appropriate tanks. A small amount of each will also be required to remove stains from the processing racks. Only one rack should be cleaned at a time by sponging the cleaner over the rollers. The cleaner should be used only on the appropriate rack and the two solutions should never be mixed. Care should be taken to avoid getting cleaning solutions inside the hollow rollers as it will almost be impossible to remove and thus will contaminate the developer and fixer solutions in the coming days. Leave the cleaning solutions on the racks for 2 to 5 minutes while applying additional cleaner to the areas still discolored. Rinse the rack thoroughly in fresh warm running water (approximately 90 °F (32 °C) for a minimum of 5 minutes). Allow the rack to drain well.

(e) Check each rack for mechanical problems following the manufacturer's recommended procedures.

(f) After the time specified by the manufacturer, drain the cleaning solutions from the processor and thoroughly flush with running water (90 °F for 5 minutes).

(g) Replace all the processing racks and fill the tanks with fresh warm water. Turn the processor on, and let it operate for 5 minutes then drain, refill with water, and repeat until the processor tanks and racks have been flushed at least three times.

(h) Perform any preventive maintenance specified by the manufacturer.

(i) Check the entire machine for loose or worn parts, for hoses that are loose or appear to be splitting or deteriorating, and repair or replace where necessary.

(j) Clean all internal and external surfaces of the processor with a mild, nonabrasive cleaning solution and remove all traces of dried chemicals or other deposits.

(k) Season the processing tanks and racks before refilling the processor with fresh chemistry. Since the developer systems cleaner is a strong acid and the developer is a strong alkali, any cleaner remaining in the racks or tanks will neutralize developer solution causing the developer solution activity level to drop off considerably within a few hours making establishment of proper operating levels nearly impossible. This can be avoided by seasoning the racks and tanks. The processor tanks are filled with fresh developer and fixer, each diluted with equal parts of water (add fixer first and then flush the developer tank with water before adding developer to avoid contamination of developer with fixer). Do not add the starter solution or replace the recirculation filters. Operate the processor without processing film for at least 30 minutes, discard the contaminated solution, flush the tanks and racks with fresh water thoroughly (checking for places like the recirculation filter holders where solution may remain), replace the developer and fixer recirculation filters, and assure that the tops of the filter holders are securely fastened. Fill the processor with fresh chemicals, filling the fixer tank first as before and then flushing the developer tank before filling with fresh developer.

(l) While waiting for the processor to season, you can drain the water from the replenishment tanks and fill them with fresh replenisher. It is necessary to pump all possible traces of water out before filling. This can be done by depressing the activation switch or microswitch on the sensing roller for at least 5 minutes.

(m) Re-establish operating levels. After the fresh chemicals have been added, add the amount of developer starter recommended by the manufacturer. Allow the processor to operate for an hour without processing to allow for temperature and developer equilibrium. Check temperature and flow rates to make sure they are at recommended levels. Process several clean-up sheets, and then expose six sensitometer strips (three on each side of the film). Wait an hour then process the strips. The average value of the test steps should fall within the broader limits of +/-0.15 for the MD and DD and +/-.05 for the B + F. If not, check temperatures and water flow rates again. If they are correct, drain the developer, flush the tank with water, refill with a freshly mixed batch of developer, and add the recommended amount of starter. Test again with cleanup and then sensitometric strips. If the average value is still outside the control limits, contact your chemical supplier or manufacturer's service representative. The broader control limits should be followed for 24 to 48 hours until sufficient films have been run for complete equilibrium. After that period you should be able to revert to the previously used limits.

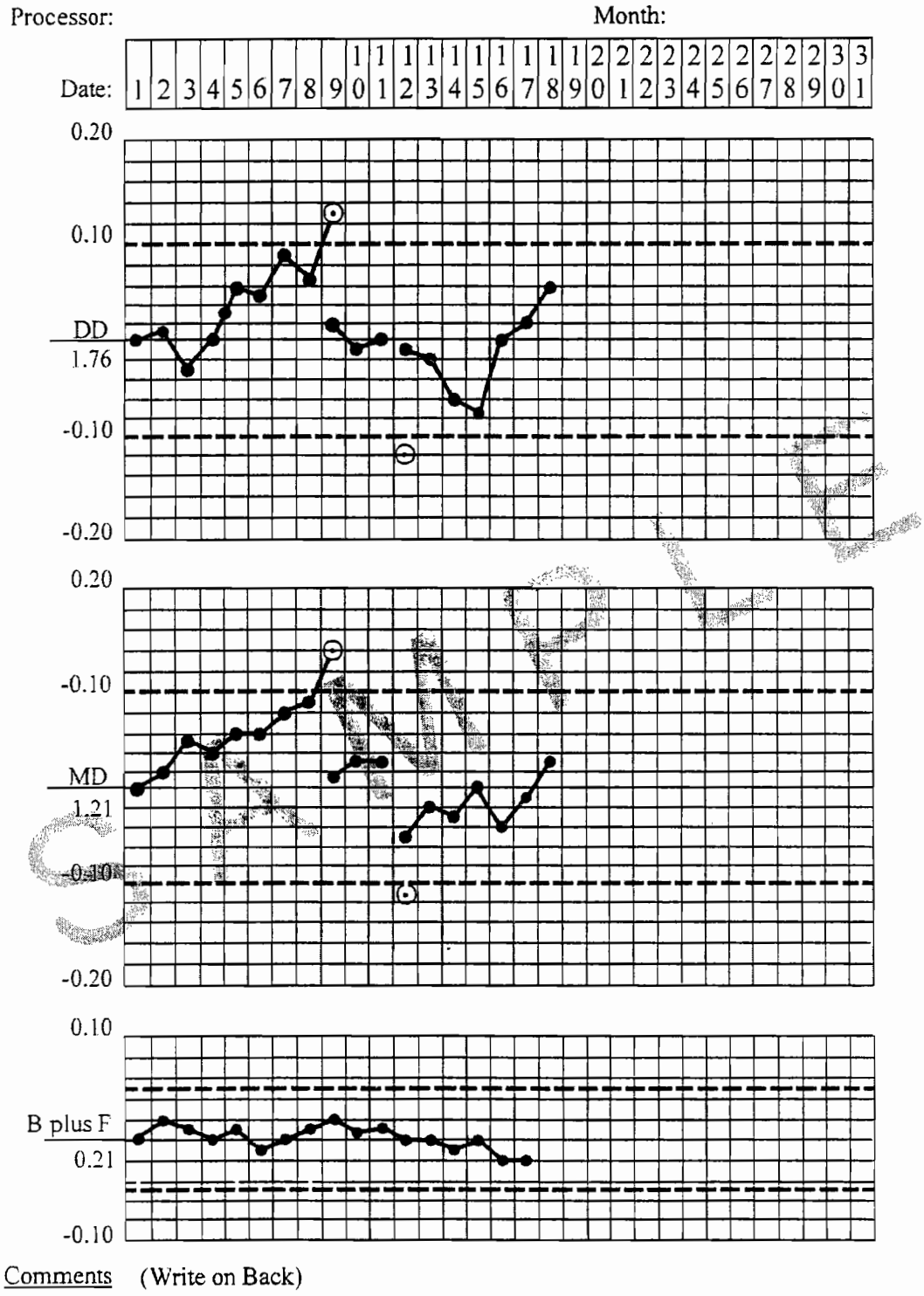

Figure F-1. X-ray processing control chart (Sample)

APPENDIX G
PROCEDURES FOR FILM CROSSOVER

G–1. Introduction

Facilities should obtain a sufficient supply of control film produced with the same emulsion from the same batch to last 6 months to 1 year. Eventually, a new batch of control film will be needed, or it may be necessary to change from one control film type to another if different film is selected for use in the department. If the control emulsion batch is changed to another with the same type of film, or from one type of film to another, the operating levels will need to be adjusted. The procedure is rather simple, but some of the former control film is needed for this process and should be saved to make the change by a film crossover procedure.

G–2. Procedures

a The following steps should be followed in making the film crossover:

(1) Assure that all of the processors are in control with the old emulsion batch.

(2) In each processor, process three control strips from the old emulsion batch followed immediately by three strips from the new emulsion.

(3) Read, record, and average the B+F, MD, and DD for both the three strips of the old emulsion batch and the three strips of the new emulsion bath for each processor.

(4) Subtract the average old emulsion values from the average new emulsion values to obtain the difference.

(5) Take the average of the differences for the B+F, MD, and DD for the processors.

(6) Add the average differences to the old operating levels to determine the new operating levels.

(7) Note these new operating levels on the control charts, and use them in future monitoring with the new control film.

b. The data in table G-1 illustrates the calculations for changing from one control emulsion batch to another.

(1) The negative values are important for the differences and for the average of the differences.

(2) The averages should be rounded-off to the nearest 1/100th.

(3) If there is only one processor, step (5) is omitted as the step (4) values are the "averages."

Table G–1. Changing control film batches

	B+F	MD	DD
Processor #1			
Average of new emulsion	0.19	1.17	1.92
Average of old emulsion	0.20	1.15	1.87
Difference (new - old)	-0.01	0.02	0.05
Processor #2			
Average of new emulsion	0.20	1.28	1.92
Average of old emulsion	0.22	1.24	1.88
Difference (new - old)	-0.02	0.04	0.04
Processor #3			
Average of new emulsion	0.22	1.15	1.89
Average of old emulsion	0.20	1.19	1.89
Difference (new - old)	0.02	-0.04	0.00
Average of differences	0.00	0.01	0.03
Old operating levels	+0.20	+1.18	+1.90
New operating levels	0.20	1.19	1.93

APPENDIX H

DARKROOM FOG TESTING PROCEDURES

H–1. Method number one

a. Make a visible-light exposure on the film with either a sensitometer or an aluminum step wedge and screen-film system. Film exposed by x-ray photon is less sensitive to fogging than film exposed by visible light and, therefore, will not provide as accurate a measure of fogging. Since most clinical images are produced with screen-film systems in which the image is produced by visible light from the screens, perform the fog test under conditions that simulate this.

b. Turn on all safelights and indicator lights used in the darkroom. Turn on all white lights in the rooms surrounding the darkroom.

c. Place the exposed test film on the counter-top, and place an opaque sheet of material (such as heavy black paper) on the film so that half of each step of the step wedge image is covered. Leave the film in this condition for 2 minutes and then process normally.

d. Compare the wedge halves.

(1) If compared visually, place a thin object (such as a pencil) along the line between the fogged and unfogged sides. There should be no visually detectable difference at any step of the step wedge.

(2) If compared using a densitometer (recommended), there should be no more than a 0.05 increase in optical density at any step of the step wedge.

H–2. Method number two

a. Turn off all safelights, cover any indicator or pilot lights on equipment, and remove any luminous dial clocks.

b. Open a new box of film, and load a cassette in total darkness.

c. Expose the film in the cassette (with intensifying screens) using an x-ray system. The density on the film from this exposure should be about 1.0. It may take some trial and error to determine the proper techniques to produce this density.

d. Place the film on the counter in the darkroom with all lights still off or covered.

e. Cover half of the film with an opaque sheet of material. Keep this half of the film covered during the next two steps.

f. Turn on the safelights, and uncover any indicator or pilot lights.

g. Cover all but the upper quarter of the remaining half of the film with a second sheet of opaque material, and wait 2 minutes. Move the second sheet down to expose the upper half of the film, and wait 1 minute. Move the sheet down another quarter to expose the upper three-quarters of the film, and wait 1 minute. Process the film. The film now has three exposed areas with 4-, 2-, and 1-minute exposures, and it should look similar to figure H-1.

h. Determine the DD between the exposed and adjacent unexposed areas. The DD between the area exposed for 2 minutes and the unexposed area should be less than 0.05. The DD between the area exposed for 1 minute and the unexposed area must be less than 0.05.

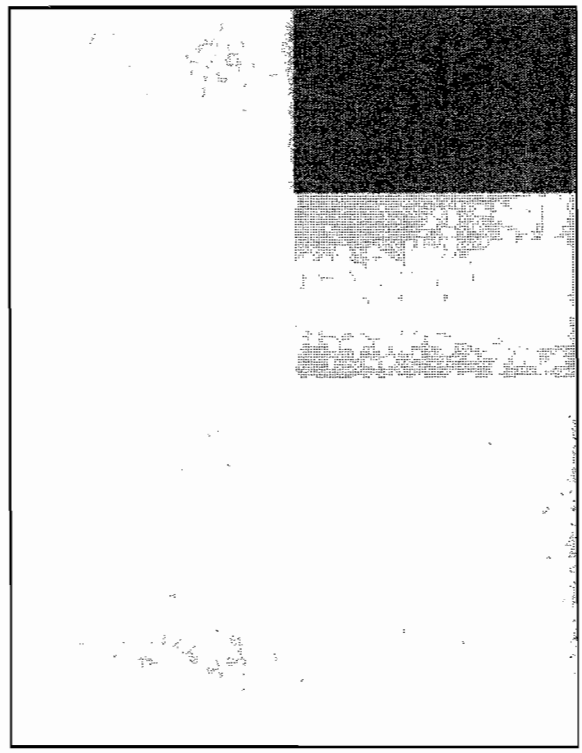

Figure H-1. Example of film with three exposed areas.

GLOSSARY

Section I. ABBREVIATIONS

AAPM
American Association of Physicists in Medicine

ABR
American Board of Radiology

AEC
automatic exposure control

AERC
automatic exposure rate control

ALARA
as low as reasonably achievable

AMEDDC&S
U. S. Army Medical Department Center and School

AMEDDPAS
U. S. Army Medical Department Property Accounting System

ANSI
American National Standards Institute

ARNG
U. S. Army National Guard

B+F
base-plus-fog

CDRH
Center for Devices and Radiological Health

CEGS
Corps of Engineers Guide Specification

CFR
Code of Federal Regulations

C/kg
Coulomb per kilogram

C/kg·hr
Coulomb per kilogram per hour

C/kg·minute
Coulomb per kilogram per minute

cm
centimeter

cm^2
square centimeter

CR
contrast ratio

CRCPD
Conference of Radiation Control Program Directors

CT
computed tomography

CTDI
computed tomography dose index

°C
degrees Celsius

DA
Department of the Army

DA Pam
Department of the Army pamphlet

DASAF
Director of Army Safety

DD
density difference or Department of Defense (when used with a form)

DENTAC
U. S. Army Dental Activity

DOD
Department of Defense

DPDO
Defense Property Disposal Office

DRMO
Defense Reutilization and Marketing Office

DSCP
Defense Supply Center - Philadelphia

EER
entrance exposure rates

EPA
U. S. Environmental Protection Agency

ESE
entrance skin exposure

FDA
Food and Drug Administration

FR
Federal Register

°F
degrees Fahrenheit

GI
gastrointestinal

Gy
gray

HHS
Health and Human Services, U. S. Department of

HLC
high-level control

HVL
half-value layer

ICR
International Commission on Radiological Protection

ID
identification

IEC
International Electrotechnical Commission

IQCP
image quality control program

JCAHO
Joint Commission on Accreditation of Healthcare Organizations

kg
kilogram

kV
kilovolt

kVp
kilovolts-peak

LINAC
linear accelerator

LS
lumbo-sacral

m
meter

m^2
square meter

mA
milliampere

MACOM
major Army command

mAs
milliampere-seconds

MD
mid-density

MEDCASE
medical care support equipment

MEDCEN
U. S. Army medical center

MEDCOM
U. S. Army Medical Command

MEDDAC
U. S. Army medical department activity

MEDSTEP
Medical Standby Equipment Program

MEPS
Military Entrance Processing Stations

MER
medical equipment repair

MeV
megaelectron volts

mGy
milliGray

mm
millimeter

MMOD
Medical Maintenance Operations Division

MQSA
Mammography Quality Standards Act of 1994

mR
milliroentgens

mR/hr
milliroentgens per hour

MTF
military treatment facility

MU
monitor units

MV
megavolt

NCRP
National Council on Radiation Protection and Measurements

NEMA
National Electrical Manufacturer's Association

NFPA
National Fire Protection Association

OCONUS
outside continental United States

PA
posterior-anterior

PBL
positive beam limitation

PID
position-indicating device

QA
quality assurance

QAP
quality assurance program

QC
quality control

R
roentgen

R/hr
roentgen per hour

R/min
roentgen per minute

RCC
Radiation Control Committee

RMC
Regional Medical Command

RPO
Radiation Protection Officer

RPP
radiation protection program

SB
supply bulletin

SF
standard form

SI
Système International (French)

SID
source-to-image distance

SOP
standing operating procedure

SSD
source-to-skin distance

STEP
sensitometric technique for the evaluation of processing

Sv
sievert

TB
technical bulletin

TB MED
technical bulletin, medical

TLD
thermoluminescent dosimeter

TM
technical manual

TMDE
test, measurement, and diagnostic equipment

TOE
table of organization and equipment

TSG
The Surgeon General

UL
Underwriters' Laboratories

USACHPPM
U. S. Army Center for Health Promotion and Preventive Medicine

USAHFPA
U. S. Army Health Facilities Planning Agency

USAMMA
U. S. Army Medical Materiel Agency

USAR
U. S. Army Reserve

Section II. TERMS

Absorbed dose (D)
The energy imparted to matter by ionizing radiation per unit mass of irradiated material at the place of interest. The unit of absorbed dose is the rad or gray (Gy). 1 Gy = 1 joule per kg. 100 rad = 1 Gy.

Acceptance test
Those tests and measurements that are performed by medical equipment maintenance personnel after installation to ensure that the diagnostic x-ray system complies with the manufacturer's stated specifications. This also includes a verification that all provisions of the contract have been fulfilled.

Accessible surface
The external surface of the enclosure or housing provided by the manufacturer.

Added filter
See filter.

Air kerma
See kerma.

Aluminum equivalent
The thickness of aluminum affording the same attenuation, under specified conditions, as the material in question.

Ancillary equipment
Any equipment that is not a major component of the x-ray system; used in support of radiologic procedures.

Assembler
Any person engaged in the business of assembling, replacing, or installing one or more components into an x-ray system or subsystem. The term includes the owner of an x-ray system or the owner's employee or agent who assembles components into an x-ray system that is subsequently used to provide professional or commercial services.

Attenuation
The reduction of exposure rate upon passage of radiation through matter.

Attenuation block
A block or stack of sheets of type 1100 aluminum alloy having dimensions 20 by 20 by 3.8 cm or other material having equivalent attenuation used for radiation measurements (a 1.5 in (3.8 cm)) thick aluminum block or 0.23 cm copper attenuation block is equivalent to a 26 cm thick patient at 90 kVp).

Authorized user
See user.

Automatic brightness control
A device that automatically controls one or more technique factors to obtain a uniform brightness on the display monitor during fluoroscopic procedures.

Automatic exposure control (AEC)
A device that automatically controls one or more technique factors to obtain, at a preselected location(s), a required quantity of radiation.

Barrier
See protective barrier.

Beam-limiting device
A device that provides a means to restrict the dimensions of the x-ray field, also called a collimator or beam-defining device.

Calibration
a. Calibration, maintenance. Electrical, electronic and mechanical tests, measurements, and adjustments that are made to ensure that the equipment (for example, film processor, diagnostic x-ray system, etc.) meets the manufacturer's stated specification and the requirements of appropriate Army and Federal directives.
b. Calibration, radiation. The measurement and description of the quality, quantity, and uniformity of the radiation field, radiation output (exposure rate or dose rate) for the range of the field sizes, depths of field, treatment distances, and various collimating devices and attenuators used to modify the primary beam.

Cassette holder
A device, other than a spot film device, that supports or fixes the position of an x-ray film cassette during a radiographic exposure.

Cephalometric device
A device intended for the radiographic visualization and measurement of the dimensions of the human head.

Certified equipment
Equipment certified by the manufacturer to comply with the Radiation Control of Health and Safety Act of 1968 as amended (21 CFR, chapter 1, subchapter J).

Cinefluorography (cine)
The production of motion picture photographic records of the image formed on the output phosphor of an image intensifier by the action of x-rays transmitted through the patient.

Coefficient of variation
The ratio of the standard deviation to the mean value of a population of observations. It is estimated using the following equation:

$$C = \frac{s}{\overline{X}} = \frac{1}{\overline{X}} \left[\sum_{i=1}^{n} \frac{(X - \overline{X})^2}{n - 1} \right]^{\frac{1}{2}}$$

Where: s = the standard deviation

$\overline{X}$ = the mean exposure

X_i = the *ith* exposure measurement

n = the total number of measurements made

Collimation
The restriction of the primary beam to an appropriate size.

Collimator
See beam-limiting device.

Compliance test
Those tests and measurements that are performed by health/radiological physicists to ensure that the diagnostic x-ray system complies with the performance standards contained this bulletin and 21 CFR, chapter 1, subchapter J.

Computed tomography (CT)
An imaging procedure that uses multiple x-ray transmission measurements and a computer program to generate tomographic images of the patient.

Cone
A device used to indicate beam direction and to establish a minimum SSD. It may or may not incorporate a collimator, also known as a PID.

Constant potential
A potential difference (or voltage) that has little, or no, periodic variation in amplitude. The periodic component is called the ripple potential (or ripple voltage).

Controlled area
An area to which access is restricted for the purpose of radiation protection. Controlled areas will not include any areas used as living quarters. A separate room or rooms in a residential building may be set apart as a controlled area. A controlled area is equivalent to a restricted area as defined by the U. S. Nuclear Regulatory Commission.

Coulomb
A unit of electrical charge that is equal to 1 ampere-second or that quantity of charge transferred in 1 second by a steady current of 1 ampere.

CT number
One of a set of numbers on a linear scale which are related to the linear attenuation coefficients calculated by a CT device. One of the specific set of CT numbers on a scale from -1000 for air to +1000 for bone, with water equal to zero, which is called a Hounsfield unit.

Dead-man switch
A switch so constructed that a circuit closing contact can be maintained only by continuous pressure on the switch.

Defect
Any unsafe condition or any failure associated with the use of an x-ray system or component thereof which relates to the health and safety of use by reason of the emission of ionizing radiation for other than its intended purpose.

Diaphragm
A plate, usually of lead, with a central aperture so placed as to reduce the primary beam to an appropriate area. See collimation.

Digital radiography
A diagnostic procedure using an appropriate radiation source and an imaging system that collects, processes, stores, recalls, and presents image information in a digital rather than analog fashion.

Digital subtraction
An image processing procedure used to improve image contrast by subtracting one digitized image from another.

Dose equivalent (H)
A quantity used for radiation protection purposes that expresses on a common scale of absorbed dose. It is defined as the product of the absorbed dose in rads, the quality factor, and certain modifying factors. The unit of dose equivalent is the rem. (For radiation protection purposes in this publication, the dose equivalent in rems may be considered numerically equivalent to the absorbed dose in rads and the exposure in roentgens.)

Dosimeter
A device for measuring radiation doses.

Effective focal spot
See focal spot.

Exposure (X)
a. A measure of the ionization produced in air by x-ray radiation. It is the sum of the electrical charges on all of the ions of one sign produced in air, when all electrons liberated by photons in a volume element of air are completely stopped in air, divided by the mass of the air in the volume element. The special unit of exposure is the "roentgen" (R).
b. The act or state of being irradiated by ionizing radiation.

Exposure rate
The exposure per unit time.

Facility
Ionizing radiation source with associated equipment and space in which it is located, sometimes called an installation.

Fail-safe
A design in which all failures of indicators or safety components that can reasonably be anticipated cause the equipment/system to fail in a mode such that personnel are "safe" from exposure to radiation.

Field emission x-ray system
An x-ray system that uses an x-ray tube in which electron emission from the cathode is due solely to the action of an electric field.

Field x-ray system
A diagnostic x-ray system normally used in direct support military operations.

Filter or filtration
Material in the primary beam which usually absorbs preferentially the less penetrating radiation. This also includes wedge filters and field-flattening filters used in radiotherapy.
a Added filter. Filter in addition to the inherent filter.
b. Inherent filter. The filter permanently in the primary beam; it includes the window of the x-ray tube and any permanent tube enclosure.
c. Total filter. The sum of the inherent and added filters.

Fluorography
The production of a photographic record of the image formed on the output of an image intensifier by the action of x-rays transmitted through the pattern.

Fluoroscopic imaging assembly
A subsystem in which x-ray photons produce a fluoroscopic image. It includes the image receptor (s) such as the image intensifier and spot-film device, electrical interlocks, if any, and structural material providing linkage between the image receptor and diagnostic source assemble.

Focal spot
a. Nominal focal spot. The actual focal spot size as reported by the tube manufacturer.
b. Effective focal spot. The projection of the actual focal spot on a plane that is perpendicular to the central perpendicular line of the window of the x-ray tube housing or to an agreed specified direction. It is also known as the projected focal spot.

Focal spot location
The location at which the anode of an x-ray tube intercepts the electron beam and x-rays are produced.

General purpose radiographic x-ray system
Any radiographic x-ray system that, by design, is not limited to radiographic examinations of specific anatomical regions (for example, extremities, head or head and neck, thoracic, and abdominal).

Gray (Gy)
The special name for the Système International (SI) unit of absorbed dose, kerma, and specific energy imparted. 1 Gy equals 1 joule per kg. 1 Gy equals 100 rad.

Half-value layer (HVL)
The thickness of a specified substance that, when introduced into the path of a given beam of radiation, reduces the exposure rate by one-half, excluding the contribution of all scattered radiation, other than any present initially in the beam concerned.

High radiation area
Any area, accessible to personnel, in which levels are such that an individual could receive a dose equivalent in excess of 0.1 rem (1millisieverts) in any 1 hour at a distance of 30 cm from the radiation source or any surface the radiation penetrates.

High-voltage generator
A device that transforms electrical energy from the electrical potential supplied by the x-ray control to the x-ray tube operating electrical potential. The device may also include means for transforming alternating current to direct current, filament transformers for the x-ray tube (s), high-voltage switches, electrical protective devices and other appropriate components/subsystems, also known as an x-ray high-voltage generator.

Image intensifier
A device installed in its housing which instantaneously converts an x-ray pattern into a corresponding light image of higher energy density.

Image receptor
Any device, such as a fluorescent screen or radiographic film which transforms incident x-ray photons either into a visible image or into another form which can be made into a visible image by further transformations. In those cases where means are provided to preselect portions of the image receptor, the term "image receptor" will mean the preselected portion of the device.

Image receptor support
For mammographic x-ray systems, it is that part of the x-ray system designed to support the image receptor in a horizontal plane during a mammographic examination.

Image receptor assembly
An image receptor in a specialized container necessary for proper operation of the receptor. For example, in mammographic x-ray systems, it is that part of the x-ray system designed to support the image receptor in a horizontal plane during a mammographic examination.

Interlock
a. A limiting device to preclude activation or exposure of a radiation source unless some specific condition is met.
b. A device that terminates the exposure when some condition is met (for example, current surge, high tube potential, collision during beam rotation).

Kerma
The sum of the initial kinetic energies of all the charged ionizing particles liberated by uncharged ionizing particles per unit mass of a specified material. Kerma is measured in the same unit as absorbed dose. The SI unit of kerma is joule per kilogram and its special name is gray (Gy). Kerma can be measured in free space or in an absorbing medium. The medium in which it was measured should be specified along with the value.

Kilovolt (kV)
A unit of electrical potential difference equal to 1000 volts.

Kilovolt constant potential
The potential difference in kilovolts of a constant potential high-voltage generator.

Kilovolt peak (kVp)
The crest value in kilovolts of the potential difference of a pulsating potential high-voltage generator.

Lead equivalent
The thickness of lead affording the same attenuation under specified conditions, as the material in question.

Leakage radiation
See radiation.

Leakage technique factors
These are specific technique factors (associated with specific source assemblies) which are used in measuring leakage radiation. They are defined as follows:

a. For diagnostic source assemblies—

(1) For capacitor energy storage equipment, the maximum rated kV and the maximum rated number of exposures in an hour at the maximum rate kV with the mAs being the greater of 10 mAs or the minimum mAs (allows the greatest exposure in an hour) available.

(2) For field emission equipment rated for pulsed operation, the maximum rated number of pulses in an hour at the maximum kVp.

(3) For all other types of equipment, the maximum rated kVp and the maximum rated continuous tube current for the maximum kVp.

b. For therapeutic source assemblies for x-ray production at tube potentials below 500 kV, the maximum rated continuous tube current for the maximum kV.

Linearity
The ability of an x-ray system to maintain a constant output ratio of the measured radiation exposure (mR) to the product of tube current and exposure time (mAs), at consecutive mA or mAs settings.

Line voltage regulation
The difference between no-load and the load line potential expressed as a percentage of the load line potential; that is

$$\text{Percent line-voltage regulation} = 100\,(V_n - V_1)/V_1$$

Where: V_n = No-load line potential.

V_1 = Load potential

Lux
A unit of illumination that is equal to one lumen per square meter. One lux is equal to 0.0929 footcandle or 10.764 lux equals 1 footcandle.

Manufacturer
Any person engaged in the business of manufacturing, assembling, or importing x-ray equipment that is subject to the standard.

Milliroentgen (mR)
One-one thousandth (1/1000 or 0.001) of a roentgen.

Multiple tube facilities
A facility containing more than one x-ray system in the same room close enough to require consideration of their combined workloads in radiation protection design. Such a facility may include two or more complete x-ray systems (single-tube systems) or a combination of two or more tube heads operable from a single control panel (multiple-tube systems).

Multipurpose x-ray system
See general purpose radiographic x-ray system.

Occupancy factor (T)
The factor by which the workload should be multiplied to correct for the degree of occupancy of the area in question.

Occupationally exposed individual
An occupationally exposed individual is an individual who is occupationally exposed to ionizing radiation as

a result of employment or duties. X-ray technologists and radiologists are examples of occupationally exposed individuals. An occupational exposure will not include the exposure of an individual to sources of ionizing radiation for the purpose of medical or dental diagnosis or therapy of that individual.

Occupied area
An area that is or may be occupied by persons.

Operator
Any individual who personally uses or manipulates a source of radiation.

Panel, fluoroscopic
Surface of a vertical fluoroscope analogous to the tabletop of a tilting table fluoroscope.

Phantom
An object used to simulate the absorption and scatter characteristics of the patient's body for radiation measurement purposes.

Photofluorography
Radiographic procedure by which a photograph is taken of a fluorescent image on a fluorescent screen.

Position indicating device (PID)
A device on a dental radiographic x-ray system used to indicate the beam position and to establish a definite SSD. The devices may or may not incorporate or serve as a beam-limiting device.

Primary beam
See radiation.

Primary protective barrier
See protective barrier.

Protective apron
Apron made of radiation absorbing materials, usually lead, used to reduce radiation exposure.

Protective barrier
A barrier of radiation absorbing materials used to reduce radiation exposure to the required value for radiation protection purposes.

a. Primary protective barrier. Barrier sufficient to attenuate the primary beam to the required value for radiation protection purposes.

b. Secondary protective barrier. Barrier sufficient to attenuate the stray radiation to the required value for radiation protection purposes.

Qualified expert

a. With reference to radiation protection, a person having the knowledge and training to measure ionizing radiation, to evaluate safety techniques, and to advise regarding radiation protection needs (for example, persons certified in this field by the ABR, the American Board of Medical Physics, or the American Board of Health Physics, or those having equivalent qualifications as determined by TSG).

b. With reference to the calibration of radiation therapy equipment, a person having, in addition to the above qualification, training and experience in the clinical applications of radiation physics to radiation therapy and meeting the requirements of chapter 9 for medical physicist (for example, persons certified in radiological physics or therapeutic radiological physics or x-ray and radium physics by the ABR, or those having equivalent qualifications).

c. With reference to medical maintenance, a person having the training and experience necessary to perform maintenance and calibration of diagnostic x-ray systems.

Quality administration
Those management actions that guarantee monitoring techniques are properly performed and evaluated and that necessary corrective measures are taken in response to monitoring results.

Quality assurance
The planned and systematic actions that provide adequate confidence that a diagnostic x-ray facility will produce consistently high quality radiographs at a minimum cost and exposure to the patient. QA actions include

both QC techniques and quality administration procedures. The nature and extent of the QAP at any medical facility will vary with the size, the type of examinations conducted, and other factors.

Quality control
The routine physical testing and calibration of the x-ray high-voltage generators, image receptors, image processors, and the ancillary equipment. QC techniques are concerned with equipment performance.

Quick change x-ray tube
An x-ray tube designed for use in its associated tube housing such that the x-ray tube cannot be inserted into its tube housing in such a manner that, after reloading, it would result in noncompliance of the x-ray system, because of focal spot position or misalignment of the beam-limiting devices with the requirements of this bulletin or 21 CFR 1020.30, 21 CFR 1020.31, 21 CFR 1020.32, and that the shielding within the tube housing cannot be displaced.

Rad
The special unit of absorbed dose equal to 0.01 joule per kg of material in question. 1 rad = 0.01 Gy (10^{-2} Gy).

Radiation (ionizing)
Any electromagnetic or particulate radiation capable of producing ions, directly or indirectly, by interaction with matter.

a. Leakage radiation. All radiation coming from within the source housing except the primary beam. Leakage radiation includes the portion of the radiation coming directly from the source and not absorbed by the source housing as well as the scattered radiation produced within the source housing. Leakage radiation does not include radiation produced when the exposure switch or timer is not activated.

b. Scattered radiation. Radiation that, during passage through matter, has been deviated indirection. (It will also have been modified by a decrease in energy.)

c. Stray radiation. The sum of leakage and scattered radiation.

d. Primary beam. Radiation that passes through the window, aperture, cone, or other beam-limiting device of the source housing when the exposure switch or timer is activated.

Radiation area
Any area, accessible to personnel, in which radiation levels are such that an individual could receive a dose equivalent in excess of 0.005 rem (0.05 millisieverts) in any 1 hour at 30 cm from the radiation source or any surface the radiation penetrates.

Radiation protection officer (RPO)
A person designated by the commander to be directly responsible for the radiation protection program (see AR 40-5, AR 11-9, and TB MED 525).

Radiation protection survey
An evaluation of existing or potential radiation hazards associated with the use of diagnostic and therapeutic x-ray systems under specified conditions.

Radiation therapy simulation device
A radiographic or fluoroscopic x-ray system intended for localizing the volume to be exposed during radiation therapy and confirming the position and size of the therapeutic irradiation field.

Radiograph
A film or other record produced by the action of x-rays on a sensitized surface.

Radiography
The production of images on film by the action of x-ray transmitted through the patient.

Reassembly
The installation of one or more components or subsystems that were previously assembled and used as an x-ray system.

Rem
The special unit of dose equivalent. For radiation protection purposes, when the quality factor is 1, the number of rems may be considered equal to the number of rads or the number of roentgens (see AR 11-9). 1 rem equals 10^{-2} sieverts (Sv).

Reproducibility
The ability of an x-ray system to maintain a near constant radiation exposure at specified techniques for repetitive exposures.

Resolution
A manifestation of sharpness and the minimum separation at which two adjacent objects can be distinguished as individual objects. The resolution capability of a focal spot is generally identified as the equivalent focal spot.

Roentgen (R)
The special unit of radiation exposure. 1 R is the amount of x-ray or gamma radiation that produces in air, ions that carry 2.58 x 10^{-4} coulomb of electrical charge of either sign. The physical quantity of exposure is being gradually replaced by air kerma. See kerma.

Scattered radiation
See radiation.

Secondary protective barrier
See protective barrier.

Serial radiography
A radiographic procedure in which a sequence of radiographs is made rapidly by using an automatic cassette changer, image intensifier, etc.

Should
Indicates an advisory recommendation that is to be followed, unless specific conditions make it impractical.

Shutter
a. In beam therapy equipment, a device fixed to the x-ray source housing to intercept the primary beam.
b. In diagnostic equipment, an adjustable device used to collimate the primary beam.

Sievert (Sv)
The special name for the SI unit of dose equivalent. 1 Sv equals 1 joule per kg. The old unit, rem, is being replaced by the sievert. 1 Sv is equal to 100 rem.

Simulator
See radiation therapy simulation device.

Slice
The single body section imaged in a tomography procedure.

Source
The focal spot of the x-ray tube (also known as the tube target).

Source-film distance
The distance measured along the central ray from the center of the front surface of the source (x-ray focal spot or sealed radioactive source) to the surface of the x-ray film.

Source housing
See protective source housing.

Source-to-image distance (SID)
The distance from the source to the center of the input surface of the image receptor.

Source-to-skin distance (SSD)
The distance measured along the central ray from the center of the front surface of the source (x-ray focal spot or sealed radioactive source) to the surface of the irradiated object.

Spot-film
A radiograph taken during a fluoroscopic examination for the purpose of providing a permanent record of an area of interest or to verify the filling of a void with contrast media.

Spot-film device
A device intended to transport or position a radiographic image receptor between the x-ray source (tube) and the fluoroscopic image receptor. It includes a device intended to hold a cassette over the input end of an image intensifier for the purpose of making a radiograph.

Stationary (fixed) equipment
Equipment that is installed in a fixed location.

Stray radiation
See radiation.

Survey
See radiation protection survey.

Target
The part of an x-ray tube anode assembly impacted by the electron beam to produce the useful primary beam.

Technique factors
The conditions of operation. They are specified as follows:
a. For a capacitor energy storage x-ray system, the kVp and the quantity of charge in mAs.
b. For a field emission x-ray system rated for pulsed operation, the kVp and the number of x-ray pulses.
c. For all other systems, the kVp and either the mA and exposure time in seconds or the product of mA and exposure time(s) in mAs.

Tomography
A special technique to show in detail images of structure lying in a predetermined plane of tissue, while blurring or eliminating detail in images of structures in other planes.

Tube housing assembly
A device that can include the insert, high-voltage or filament transformers and other components/subsystems when they are contained within the tube housing.

Uncontrolled area
Any space or area not meeting the definition of a controlled area. The area is equivalent to an unrestricted area as defined by the U.S. Nuclear Regulatory Commission.

Use factor (beam direction factor) (U)
Fraction of the workload during which the primary beam is directed at the barrier under consideration.

User
An individual(s) who has been delegated the responsibility for the use, operation, or storage of ionizing radiation sources. The user may be the operator.

Verification
Periodic performance of specified tests and measurements required to determine that diagnostic x-ray equipment is functioning and is maintained according to the manufacturer's specifications and within guidelines established by the standard.

Visible area
That portion of the input surface of the image receptor over which incident x-ray photons are producing a visible image.

Will
Indicates that an item is mandatory to be in compliance with Federal and Army regulations.

Workload (W)
The degree of use of an x-ray source. For x-ray systems operable below 500 kV, the workload is usually expressed in mA-min per week. For x-ray systems operating at 500 kV or above, the workload is usually stated in terms of the weekly exposure of the primary beam at 100 cm from the source and is expressed in roentgens per week.

X-ray control
A device that controls input electrical power to the x-ray high-voltage generator/x-ray tube. It includes components/subsystems such as timers, phototimers, automatic brightness stabilizers, and similar devices which control and display technique factors of an x-ray exposure. Normally there are components/subsystems which permit line voltage compensation.

X-ray equipment
An x-ray system, subsystem, or component thereof.

X-ray high-voltage generator
A device that transforms electrical energy from the potential supplied by the x-ray control to the tube operating potential. The device may include means for transforming alternating current to direct current, filament transformers for the x-ray tube(s), high-voltage switches, electrical protective devices, and other components.

X-ray subsystem
Any combination of two or more components of an x-ray system for which there are requirements specified in this bulletin.

X-ray system
An assemblage of components or subsystems for the controlled production of x-rays. This system includes as a minimum an x-ray high-voltage generator, an x-ray control, a tube housing assembly, beam-limiting device, and the necessary supporting structures. Additional components which function with the system are considered integral parts of the system, also called x-ray equipment.

X-ray tube
Any electron tube that is designed for the conversion of electrical energy into x-ray energy. Also called a tube.

INDEX

This index is organized alphabetically by topic and by subtopic. Topics and subtopics are identified by paragraph number.

Ancillary equipment/devices, 1-10, 3-10, glossary

Assembly

Diagnostic Source, 4-2, 4-3, 4-7, 4-12, glossary

Fluoroscopic Imaging, 4-7, glossary

High voltage Generator, 4-7

Tube Housing, 1-5, 2-3, 2-4, 4-2, 4-3, 8-3, 8-4, glossary

X-Ray System, 1-5, 2-1, 2-3, 10-3, 10-4, 10-6

Authorized use/user, 1-6, 3-3, 9-1, glossary

Automatic brightness control, 3-6, 3-12, 5-10, appendix B, glossary

Automatic exposure control (AEC), 4-3, 5-10, appendix B, glossary

Automatic exposure rate control (AERC), 4-7, glossary

Barrier. See Shielding.

Beam block, 8-4

Beam-limiting devices, 2-3, 2-9, 4-3, 4-7, 8-4, 8-8, glossary

Beam monitors, 8-4, 8-8

Beam quality, 3-12, 4-2, 8-8, appendix C. See also Technique factors

Bucky slot cover, 4-7

Calibration, 1-1, 1-5, 1-6, 1-10, 2-6 through 2-8, 7-2, 7-5, 8-3, 8-5, 8-9, 9-2, 9-3, 10-1, 10-7, appendices C and F, glossary

Cassette, 3-10, 6-5, 7-5

Cassette holder, 2-9, 3-10, 4-2, 4-3, 4-12, glossary

Cinefluorography, 3-6, 3-9, 3-12, 4-7, glossary

Compliance, 1-5, 2-3, 2-9, 4-1 through 4-3, 4-9, 5-2, 5-4, 5-5, 5-8, 5-9, 6-1, 7-1, 7-2, 7-4, 7-6, 8-5, 8-8, 8-9, 8-11, 9-3, glossary

Component(s)

Accessory, 2-9

Certified, 2-2, 2-3, 2-5, 10-2 through 10-4
Labeling, 2-2, 2-3, 2-5, 4-2
Manufacturer's procedures, 2-3
Temporarily installed, 2-5
Uncertified, 2-2, 2-3, 2-5, 10-2, 10-3
Computed tomography (CT), 3-12, 4-2, 4-3, 4-9, 5-3, 5-9, glossary
Construction, 1-5, 1-7, 4-11, 4-12, 8-10
Contrast ratio (CR), 4-3
Control
Booth, 4-3, 4-12, 4-13
Charts, appendices C, E, F, and G
Film, appendices D, F, and G
Panel, 3-3, 4-2 through 4-5, 4-8, 4-12, 4-13, 4-15, 8-4 through 8-6, 8-8 through 8-10, 9-3, 9-4
Strip, 6-4, appendices E, F, and G
Switch. See Switches
Controlled area, 4-12, 5-12, glossary
Corrective action, 1-5, 1-8, 5-11, 5-12, 6-2, 6-3, 6-8, 6-9, 7-6, 8-5, 9-2, appendices C and F
Credentialling, 1-6, 3-6, 9-1, 9-3
CT condition of operation, 4-9
CT dose index (CTDI), 3-12, 5-9

Darkroom
Fog testing, 6-6, appendices F and H
Quality control, 6-6, appendix C
Dead-man switch. See Switches
Densitometer, 7-5, appendices B through F, and H
Design
Beam monitor system, 8-4
Diagnostic x-ray rooms, 4-13
Diagnostic x-ray systems, 1-7, 4-1 through 4-10
Dose monitoring system, 8-8
Facility requirements, 1-7, 4-11, 4-12, 4-15, 4-16, 7-5, 8-6, 8-10
Field radiographic x-ray systems, 7-4
Filter system, 8-4

Therapeutic x-ray rooms, 4-15, 8-10

Therapeutic x-ray system, 1-7, 8-4, 8-8

Diagnostic source assembly, 4-2, 4-3, 4-7, 4-12

Disposal of

High-voltage transformers, 1-12

X-ray equipment, 1-1, 1-11

Dose

Calculation, 1-6, 8-5, 8-8, 8-9, 9-3

Misadministration, 9-5

Monitoring system, 8-4, 8-8

Monitor units, 8-8

Patient, 3-2, 3-5, 3-6, 3-8, 3-9, 3-11, 3-12, 4-5, 5-11, 7-5, 8-4, 9-1, 9-2, appendices C and D

Dosimeter, wrist or ring, 3-6

Embryo-fetus, 3-4, 3-6

Entrance doors, 4-13, 4-15, 8-6, 8-9, 8-10

Entrance exposure rate (EER), 3-9, 4-7, 5-8, 5-10

Entrance skin exposure (ESE), 3-8, 5-4, 5-10, appendix B

Equipment QC program, 5-2, 9-3

Evaluation of

Design plans, 4-12

Film/screen contact, 6-5

Image quality, 6-3

Personal protective equipment, 5-11

Processor speed, 6-4, appendix D

Protective barriers/shielding, 4-14, 8-10

Exceptions for

Acceptance surveys, 5-3

Military operations, 7-6

Open doors, 3-4

Posted signs, 4-13

Exposure switch. See Switches

Exposure time, 3-6, 3-10, 3-12, 4-3, 4-7, 4-9, 8-4, 9-2, appendices C and F. See also Technique factors

Facility
Acquisition, 1-1, 1-5
Design, 1-1, 1-5, 1-7, 4-11 through 4-13, 4-15, 4-16, 8-6, 8-10
Evaluation, 1-1, 1-5
Modification, 1-7, 4-11, 4-12
Film crossover, 6-4, appendix G
Film optical density, 5-4, 5-10, appendices B, E, F, and H
Filters(s)
Beam scattering, 8-8
Dual, 4-5
Field flattening, 8-8
Interlock, 4-2, 4-5, 8-8
Maximum treatment, 8-4
Recirculation, appendices E and F
Screens, 6-4, 7-5
System, 8-4
Wedge, 8-4, 8-8
Filtration, 2-3, 3-4, 3-5, 3-7, 3-12, 4-2, 8-4, glossary
Fluoroscopic imaging assembly, 4-7, glossary
Focal spot, 2-3, 3-12, 4-2, 4-7, 8-4, appendix B, glossary

Gonad shielding. See Personal protective equipment

Half-value layer (HVL), 3-12, 4-2, glossary. See also Beam quality
High level control (HLC), 4-7
High-voltage generator, 1-12, 4-7, glossary

Image intensification, 1-6, 3-12
Image quality, 3-8, 3-11, 3-12, 5-1 through 5-3, 5-10, 6-1, 6-2, 6-4, 6-7, 6-8, 7-3, 7-5, 7-6, appendices C and F
Image quality control procedures, 6-4 through 6-9
Image quality control program (IQCP), 5-2, 6-2 , 6-3, 6-7
Image receptor, 3-4, 3-6 through 3-8, 3-12, 4-2, 4-3, 4-7, 4-12, 6-5, appendix C
Installation (of x-ray systems), 1-7, 10-4

Intensifying screens, 3-4, 3-12, 6-5, 7-5, appendix H
Interlocks, 4-12, 4-13, 4-15, 8-6, 8-8 through 8-10

Labels, 1-7, 2-2, 2-3, 2-5, 4-2, 4-3, 4-7, 4-15, 8-4
Leakage radiation, 2-3, 4-2, 8-4, 8-8, glossary
Linear accelerator (LINAC), 1-6, 4-14, 4-15, 8-9, 8-10, 9-2, 9-4 through 9-6
Line voltage, 4-8
Loan of x-ray components, 2-5

Maintenance, 1-1, 1-5, 1-10, 2-3, 2-4, 2-6, 2-7, 6-4, 7-4, appendices C and F
Manufacturer, 1-10, 2-2, 2-3, 2-7, 3-4, 4-2, 4-3, 4-6 through 4-9, 5-9, 6-1, 6-3 through 6-5, 8-8, 8-9, 10-6, 10-7, appendices C through F
Medical materiel complaints, 1-8
Medical physicist, 1-6, 4-12, 5-3, 8-2, 8-5, 8-8, 8-9, 9-1 through 9-4, appendix C
Misadministrations, 9-5. See also Dose

Occupationally exposed individual, 3-1, 3-2, 3-4, 3-10, 5-11, 7-5, glossary
Operating levels, 6-3, 6-4, appendices E through G
Overall, 2-1, 2-4

Patient
  Dose. See Dose, patient
  Holding, 3-4, 3-10, 8-3, 8-7
  Pregnant, 3-4, 3-6
Personal protective equipment
  Gloves, 3-4, 3-6, 3-10, 5-11, 8-3
  Goggles, appendix F
  Gonad shields, 3-4, 3-6, 5-11
  Lead aprons, 3-4 through 3-6, 3-8, 3-10, 5-11, 7-5, 8-3, glossary
Phantoms, 4-5, 4-6, 4-14, 5-10, 6-8, 8-8, appendix B, glossary
Polychlorinated biphenyls, 1-12

Positive beam limitation (PBL), 4-3

Primary beam, 3-4, 3-5, 3-6, 3-8, 3-10, 3-12, 4-2 through 4-4, 4-7, 4-9, 4-13, 4-14, 7-5, 8-4, 8-8 through 8-10, 9-3, 9-4, appendix C, glossary.

Procedures

CDR, AMEDDC&S, 1-5d, 1-5e

CDR, Dental fixed treatment facilities, 1-5j

DCR, Dental units, 7-2

CDR, Field dental units, 1-5k

CDR, Field medical units, 1-5k, 7-5

CDR, MACOMs, 1-5c

CDR, Medical fixed treatment facilities, 1-5j

CDR, Medical groups, 7-2

CDR, Medical units, 7-2, 7-6

CDR, OCONUS MEDCOMs, 1-5g

CDR, RMCs, 1-5i

CDR, USAHFPA, 1-5h

CDR, USAMMA, 1-5e

CG, MEDCOM, 1-5d

CG, USACHPPM, 1-5f

Dental specialists, 1-6

Dentists, 3-2, 5-16, 6-2, 7-3

Director Army Safety, 1-5a

Medical group RPO, 7-2, 7-5, 7-6

Medical x-ray specialists, 1-6

Physician(s), 1-6, 3-2, 3-4, 3-6, 3-9, 5-11, 6-2, 7-3 through 7-5, 9-2, 9-6

Radiologists, 7-3

RPO, 1-5, 3-4, 4-17, 6-2, 6-3, 7-2, 7-3, 7-5, 7-6, 8-2, 8-9 through 8-11, 9-3, 9-4, glossary

Veterinarians, 3-2, 5-11, 6-2

Processor

Built-in thermometer, 6-4

Control charts, appendix C

Filler tanks, appendices E and F

Maintenance, 6-4, appendix F

Maintenance logs, 6-4, appendices C and F

Monitoring, 6-4, appendices C and F

QAP, appendix F
Solution temperature, 6-3
Speed, 6-3 through 6-5, appendix D
STEP test, appendix D
Protective barrier. See shielding.

Qualifications. See Training
Qualified expert, 1-5, 4-12, 5-1, 5-3 through 5-10, 5-12, 6-2, 8-5, 8-10, 8-11, 10-7, appendices C and D, glossary
Quality assurance program (QAP), 3-4, 5-2, 6-1, 6-2, 7-2, 8-2, 9-1, 9-2, appendices C and F
Quality control (QC)
Darkroom, 6-6, appendices C, F, and H
Dental radiographic facilities, 6-8
Film handling, 6-1
Film processors, 3-7, 6-4, appendices C through G
Fluoroscopic, appendix C
Image receptors, 3-4, 4-3, 6-5, appendix C
Information, 1-9, 3-2, 3-8, 3-12, 5-2, 6-3, 6-8, 7-2, appendices C and F
Maintenance, 6-4, appendices C and F
Mammographic radiographic facilities, 6-9
Monitoring, 5-2, 6-1 through 6-4, appendices C and F
Radiographic unit, appendix C
Repeat analysis, 6-7, appendix C
Technologist. See Technologist
View boxes, 6-5
Quality control (QC) program, 5-2, 6-9, 7-5, 9-1, 9-3, appendix E
Quick-change x-ray tube, 2-3, glossary

Radiation control committee (RCC), 8-2, 9-1
Radiation, protection of
Embryo-fetus, 3-4, 3-6
Gonads, 3-4, 3-6
Occupationally exposed individuals, 1-5, 3-1, 3-2, 5-11, glossary
Patient, 3-1, 3-2, 3-4 through 3-6, 3-8, 3-9, 3-11, 3-12, 5-11, 7-5
Pregnant patient, 3-4, 3-6
Public, 3-1, 3-2, 3-12

Radiation protection program (RPP), 1-5, 7-2, 7-6

Radiation therapy, 1-6, 4-3, 4-7, 8-2, 8-3, 8-7, 9-1 through 9-4

Radiation therapy simulation system, 4-3, 4-7, glossary

Reassembly, 1-5, 2-1, 10-4, glossary

Recalls, 1-9

Receptacles

Anode, 4-2, 4-7

Cathode, 4-2, 4-7

Records, 1-5, 5-11, 6-2, 8-5, 8-8, 8-9, 9-3, 9-6, 10-1, 10-2, 10-7, appendices C and F

Repair, 1-5, 1-10, 1-11, 2-1, 2-4, 2-5, 2-7, 8-9, 9-3, 10-2, appendices C and F

Repeat analysis, 6-7

Reporting requirements, 8-2, 9-6, 10-1

Reports, 1-5, 6-3, 7-6, 8-9, 8-10, appendix C

Retakes, 7-5, appendix C

Radiation protection officer (RPO), 1-5, 3-4, 4-17, 6-2, 6-3, 7-2, 7-3, 7-5, 7-6, 8-2, 8-9 through 8-11, 9-3, 9-4, appendix C, glossary. See also Procedures, RPO

Safety instructions, 9-4

Scattered radiation, 3-6, 3-12, glossary

Sensitometer, 7-5, appendices C through F, and H

Serial fluorography, 3-6

Serial radiography, 4-3, glossary

Shielding

Barriers, 3-4, 3-5, 4-7, 4-12 through 4-14, 8-6, 8-10, glossary

Devices, 3-4, 7-6

Evaluation, 1-5, 8-10

Eye, 3-4

Gonad. See Personal protective equipment

Ovarian, 3-4

Skirt (drape), 3-6, 3-10, 4-7, 5-11

Source-to-image distance (SID), 3-4, 4-3, 4-7, 4-9, 4-12, glossary

Source-to-skin distance (SSD), 3-4, 3-5, 3-12, 4-3, 4-4, 4-7, 8-4, glossary

Specialists

Dental, 1-6

Medical x-ray, 1-6
Nonradiology, 1-6, 3-6
Spot checks, 1-6, 8-3, 8-5, 8-9
Spot film
Devices, 4-3, glossary
Recording, 3-4
Selector, 4-3
STEP processor test, 6-4, 6-8, 7-5, 7-6, appendices B, D, and F through H
Stray radiation, glossary
Surveys
Annual, 1-5, 5-3 through 5-5, 5-8, 5-9, 7-5, appendix C
Biennial, 5-3, 5-5
Computed Tomography, 5-9
Dental, 5-5
Diagnostic x-ray systems, 1-5, 5-1, 5-3, 5-4, 5-8, 7-2, 8-1
Exceptions, 5-3, 7-6
Facilities, 5-3, 5-12, 8-1, 8-11
Fluoroscopic, 5-8
Health physics radiation safety, 1-5, 5-3, 7-2
Initial/acceptance, 1-5, 5-3 through 5-6, 5-8, 5-9
Mammography, 5-7
Medical maintenance, 1-5, 5-3
Periodic, 5-2 through 5-4, 5-6, 5-7
Quality assurance, 1-5, 7-5, appendix C
Radiation protection, 1-5, 4-14, 5-3, 5-4, 7-5, 10-2, glossary
Veterinary, 5-6
Switches
Control, 4-13
Dead-man, 4-3, glossary
Dimmer, 4-13
Discharge, 4-13
Exposure, 4-3, 4-4, 4-13
Failure override, 4-3, 4-7
Interruption, 4-13, 8-8
Main power, 4-2

Telemetric exposure, 4-3
Termination, 8-8

Technique factors, 2-3, 3-10 through 3-12, 4-2, 4-3, 5-10, 8-4, 8-5, glossary
Beam quality, 3-11, 4-2, 8-8, appendix C
Exposure reproducibility, 3-12, appendix C
Exposure time, 1-5, 3-6, 3-10, 3-12, 4-3, 4-7, 8-4, 9-2, appendices C and F
Focal spot size, 3-12
Phototimer performance, 3-12
Radiation output, 3-10, 3-12, 4-3, 4-14, 8-5, 9-2
SSD, 3-4, 3-5, 3-12, 4-3, 4-4, 4-7, 8-4, glossary
Tube current, 1-5, 3-6, 3-12, 4-2, 4-3, 4-8
Tube potential, 1-5, 3-4 through 3-6, 3-8, 3-12, 4-2, 4-3, 4-7, 4-15, 8-3, 8-4
X-ray beam alignment, 3-12
Technologist
Chief, 5-11, 7-6, 9-2, appendix C
Dental x-ray, 1-6, 5-11, 7-5, 7-6, 9-2
Laboratory, 1-6
Limited privileged x-ray, 1-6
Medical x-ray, 1-6, 5-10, 5-11, 7-5, 7-6, 9-2
QC, 5-11, 6-3, 6-7, 6-8, 7-6, 9-2, appendix C
Qualified radiologic, 1-6, 5-11
Student, 1-6
X-ray, 1-5, 1-6, 4-13, 5-10, 5-11, 6-5, 6-7, 7-3, 7-5, 7-6, 9-2
Temporary installation, 2-5
Timer(s), 3-12, 4-3, 4-7, 4-8, 4-9, 8-4, 8-6, 8-8, appendix C
Training
Dental specialists, 1-6
Dental x-ray technologists, 1-6, 7-1, 7-5
Equipment, 3-4, 7-4
Health physics personnel, 1-5
Medical dosimetrist, 9-2
Medical equipment personnel, 1-5
Medical maintenance personnel, 1-5
Medical physicist, 1-6, 9-1, 9-2

Medical x-ray specialists, 1-6
Medical x-ray technologists, 7-5
Occupationally exposed individuals, 1-5
Operators of x-ray equipment, 1-6, 7-1, 9-2
Physicians, 1-5, 1-6, 9-1, 9-2
QC technologists, 6-2, 6-3, appendix C
Radiation oncologist, 1-6
Radiation therapist, 9-2
Radiologist, 1-5
Student technologists, 1-6
X-ray technicians, 1-5, 7-1
X-ray technologist, 1-5, 1-6, 7-1
Tube current, 1-5, 3-6, 3-12, 4-2, 4-3, 4-8. See also Technique factors
Tube housing, 1-5, 2-3, 2-4, 3-8, 4-2, 4-3, 4-5, 4-7, 8-3, 8-4, glossary
Tube potential, 1-5, 3-4 through 3-6, 3-8, 3-12, 4-2, 4-3, 4-7, 4-15, 8-3, 8-4. See also Technique factors

Unauthorized use/user, 3-3, 4-4, 8-4, 8-7
Uncontrolled area, 4-12, 5-12, glossary

Waivers, 7-1, 7-2, 7-4, 7-6
Written report, 6-2, 7-6, 8-11, 9-6

X-ray control, 1-5, 3-12, 4-3, 4-8, 4-12, 4-13, 7-6, glossary
X-ray film, 3-4, 4-13, 6-8, 6-9, 7-5, 7-6
X-ray systems, types of
Cardiac, 3-4, 3-9, 4-8
Certified, 1-5, 1-6, 1-8, 1-11, 2-2 through 2-5, 4-5, 4-10, 10-2, 10-3, 10-4, 10-6, glossary
Computed tomography, 3-12, 4-2, 4-3, 4-9, 5-3, 5-9, glossary
Dental, 1-5, 1-6, 2-2, 3-2, 3-4, 3-8, 4-3, 4-16, 5-2, 5-5, 5-10, 6-2, 6-8, 7-1 through 7-3, 7-5, 8-4, 10-4, appendix B, glossary
Diagnostic, 1-1, 1-2, 1-5 through 1-8, 1-10, 2-1, 2-6, 2-9, 3-2, 4-1 through 4-12, 5-1, 5-3, 5-12, 6-3, 7-1, 10-1, 10-2, 10-4, 11-7
Digital, 6-1, glossary

Field, 1-5, 2-7, 7-1 through 7-5, 10-4, glossary

Fluoroscopic, 1-6, 3-4, 3-6, 3-9, 3-10, 4-3, 4-7, 4-13, 5-3, 5-8, 5-10, appendices B and C, glossary

Mammographic, 3-7, 4-3, 4-5, 4-13, 5-3, 5-7, 6-9

Medical research, 1-1, 1-5, 1-7, 1-8, 4-16, 5-3

Mobile, 1-5, 3-3, 3-5, 4-3, 4-4

Portable, 3-5, 3-9, 3-10, 4-3, 4-4, 4-7, 7-4, 7-5

Radiation therapy simulation, 4-3, 4-7, glossary

Radiographic, 1-5, 3-5, 3-11, 3-12, 4-3 through 4-5, 4-10, 4-13, 5-3, 5-4, 5-10, 7-2 through 7-5, appendices B and C, glossary

Stationary, 1-5, 4-3, 4-7, glossary

Therapeutic, 1-1, 1-2, 1-5 through 1-8, 1-10, 4-15, 8-1, 8-9, 9-2, 9-3

Tomographic, 4-3, 4-6, 5-4

Uncertified, 1-5, 1-11, 2-2, 2-4, 2-5, 4-10, 10-2, 10-3

Veterinary 3-2, 3-10, 4-10, 4-16, 5-6

By Order of the Secretary of the Army:

ERIC K. SHINSEKI
General, United States Army
Chief of Staff

Official:

JOEL B. HUDSON
Administrative Assistant to the
Secretary of the Army

Distribution:
To be distributed in accordance with Initial Distribution Number (IDN) 342388, requirements for TB MED 521.

PIN: 049007-000